DRAFT
YMPO Rail/Heavy Freight Alignment Study

WORKING PAPER 1: CURRENT AND FUTURE CONDITIONS
MARCH 2022

Prepared for:

Yuma Metropolitan Planning Organization
230 West Morrison Street
Yuma, Arizona 85364

Prepared by:

Kimley»Horn

1001 W. Southern Ave., Suite 131
Mesa, AZ 85210

Contents

1. Introduction 2
2. Previous Plans and Studies 4
3. Stakeholder Engagement 12
4. Freight Flows 14
5. Transportation System 18
6. Future Land Use 22
7. Environmental Overview 28
8. Rail Alignment Opportunities and Constraints 36
9. Rail Infrastructure Planning Scenario 38
Appendix A. Stakeholder Engagement Summaries 40
Appendix B. Applicable UPRR Engineering Standards 49

1. Introduction

Project History and Overview

The Yuma Metropolitan Planning Organization (YMPO) is conducting a study to identify a preliminary alignment for a possible rail/heavy fright corridor in the Yuma region. The study builds upon the 2013 Yuma County Rail Corridor Study, which recommended multiple rail corridors options between Sonora, Mexico, and Yuma County. In addition, the study explored opportunities for freight-related economic development. Two of the study alternatives (Alternatives 6 and 7) collectively evaluated benefits of an industrial park near San Luis and a connection from the U.S./Mexico border north to the Union Pacific Railroad (UPRR) Sunset Route that runs roughly parallel to Interstate 8 (I-8). These two alternatives serve as the beginning point for this 2022 YMPO Heavy Rail/Freight Alignment Study.

Since completion of the 2013 study, the Yuma region has been increasingly pressured by development interests. Much of this new development activity is in the eastern portion of Yuma, adjacent to the unincorporated Yuma Foothills Area. Ongoing development activity places additional constraints on potential previously identified rail corridors.

Goals and Objectives

The 2022 YMPO Rail/Heavy Freight Alignment Study will build upon the 2013 analysis to define the rail corridor from the United States/Mexico border north to the UPRR. The study will identify a recommended location for a 500-foot-wide corridor, which could ultimately accommodate a freight rail facility as well as other utilities, which could co-locate within the rail corridor. Study objectives are:

- Review data, findings, and conclusions from previous plans and studies, including the 2013 Yuma County Rail Corridor Study.
- Update a commodity flow summary of existing and future freight movements by origin/destination, mode, volume, and value, with a focus on seaports in Mexico. The summary will identify economic trends and forecasts that would affect the YMPO study area.
- Identify border rail crossing opportunities that will accommodate anticipated freight flows from U.S./Mexico freight interests to the YMPO region.
- Establish the alignment for a potential regional freight rail connection between the U.S./Mexico border near San Luis and the UPRR. The freight line would support an efficient freight transportation network in Yuma County, promoting economic development. Currently, the City of Yuma and stakeholder agencies do not have the ability to preserve land for a new rail corridor because an alignment has not yet been documented. Corridor definition is necessary to allow for corridor preservation and pursuit of federal funding for construction of the rail spur corridor. The YMPO Rail/Heavy Freight Rail Study will set the stage for detailed environmental review and provide a basis for corridor preservation.
- Describe potential funding sources that may be available to implement the corridor. Summarize the project-level funding analysis and financing plan for the corridor using those funding sources deemed most viable by the project's stakeholders.

Study Area

The study area is comprised of over 240 square miles and incorporates the eastern reaches of the Cities of Yuma and San Luis, a small portion of the City of Somerton, and portions of unincorporated Yuma County as shown in **Figure 1**. The study area is bounded by:

- The UPRR Sunset Route to the north.
- Avenue 15E in the Foothills area of unincorporated Yuma County and the eastern boundary of the City of Yuma in the Barry M. Goldwater Air Force Range (Goldwater AFR) to the east.

- Avenue 3E near Marine Corps Air Station (MCAS) Yuma, Avenue B near Somerton, and Avenue F near San Luis to the west.
- The United States/Mexico border to the south.

Figure 1. Study Area

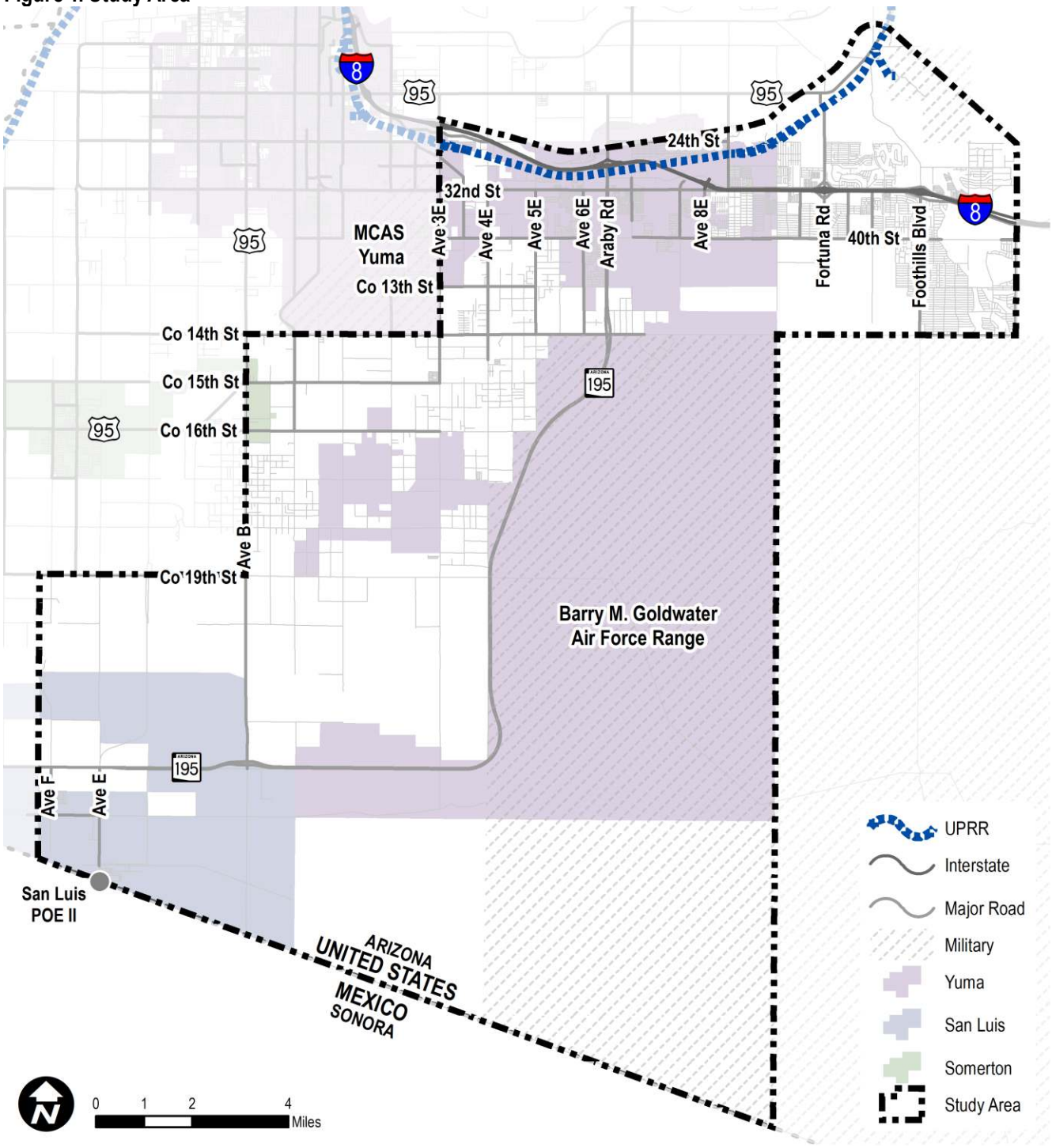

2. Previous Plans and Studies

2013 Yuma County Rail Corridor Study

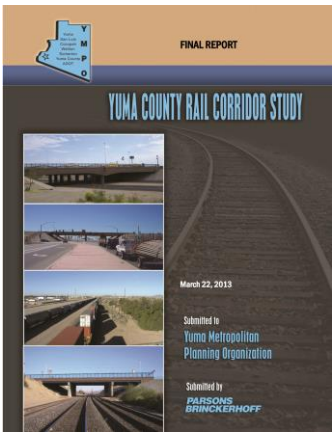

The *Yuma County Rail Corridor Study* was completed in 2013 and explored opportunities for freight-stimulated economic development, freight mobility, and freight access. The study identified alternatives to implement a new rail alignment between the UPRR Sunset Route and the Ferromex Calexico subdivision, crossing the border near San Luis II Port of Entry (POE) and ultimately connecting to a proposed new seaport on the Pacific Ocean at Punta Colonet, Baja California, Mexico. Major conclusions and considerations that arose out of this study include:

- If the Port of Punta Colonet were built and handled significant container volumes, the benefits of building a rail line through Yuma County would likely justify the investment. If this port is not built, it is unlikely that the investment would be justified by local freight needs, many of which are perishable goods that are not typically transported by rail.
- If a north-south rail line were built in Yuma County, most stakeholders supported an alignment that roughly parallels State Route (SR) 195 to connect an international rail crossing near the San Luis II POE to the UPRR. However, there are several obstacles to constructing a railroad along this alignment, both environmental and political.
- A new rail line could attract additional employment opportunities to large available plots of land in eastern San Luis and near Wellton. Additionally, a transload facility could provide additional points of access for Yuma County businesses to the rail network.

City of Yuma General Plan

The *City of Yuma General Plan* provides guidance to the City for future development. Focus areas of planned land uses are identified to establish guidance for anticipated growth. The focus area of Yuma spans from Avenue E to Avenue 10E and 1st Street to County 19th St. The focus area is comprised of agricultural land on the outskirts of the city, with a variety of residential and commercial land uses near the east and west portions of I-8. Industrial and Agricultural/Industrial development is proposed south and east of Marine Corps Air Station (MCAS) Yuma. This proposed industrial area is adjacent to rural density residential development. The land use planning focus area is shown in **Figure 2**.

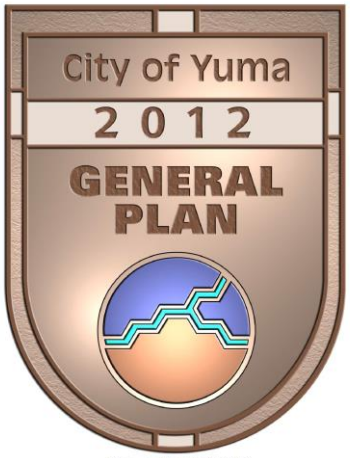

As of 4/6/19

The General Plan recommends:

- MCAS Yuma and the surrounding area be protected from urban encroachment by minimizing residential development.
- Minimizing encroachment on operations at the Goldwater AFR by excluding utility expansion within a mile of the Goldwater AFR limits.
- City of Yuma implement an expanded freight and passenger rail network to provide economic opportunities to the City.

The plan supports enhancements, improvements, and expansion of rail lines throughout the Yuma area, including the Sunset Route and Wellton Branch.

Figure 2. City of Yuma General Plan Land Use Focus Area

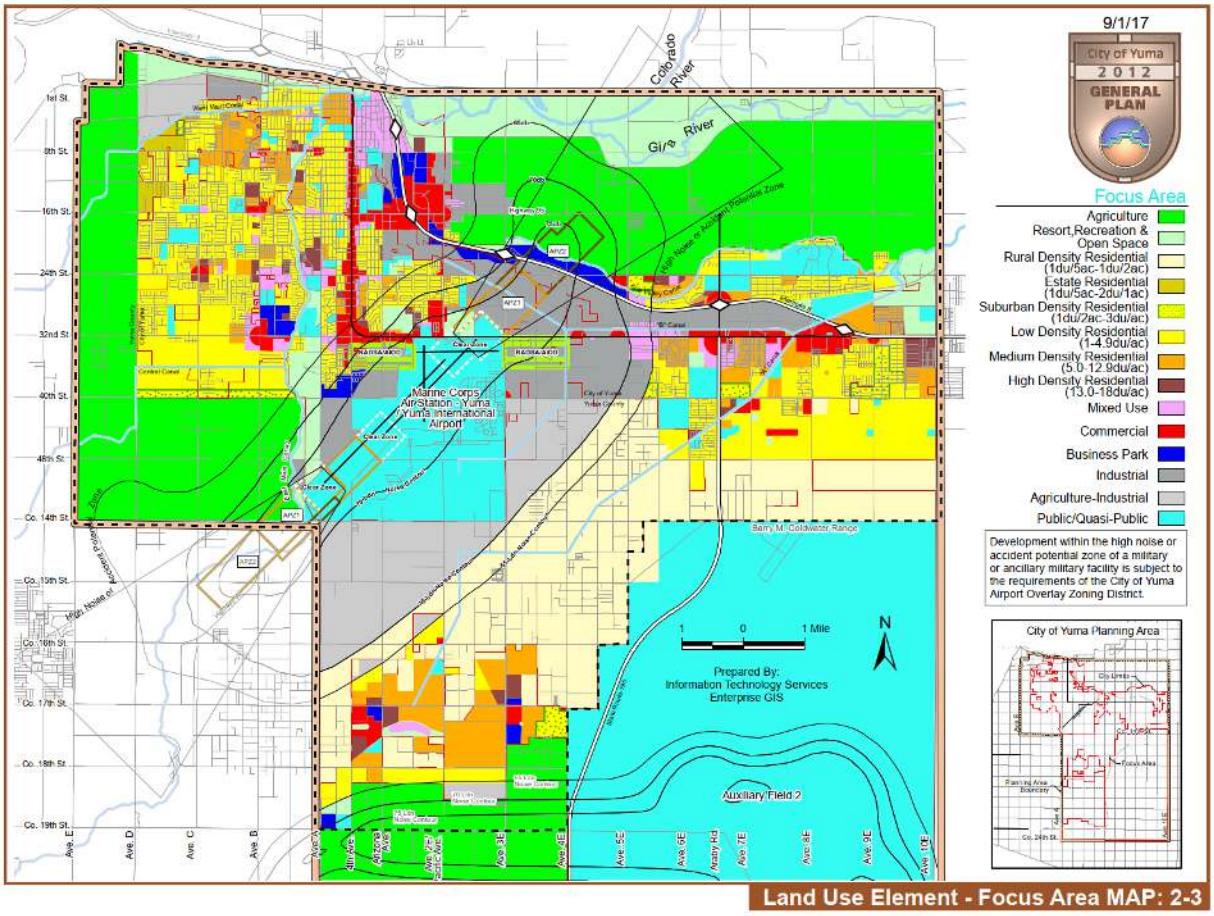

City of San Luis General Plan

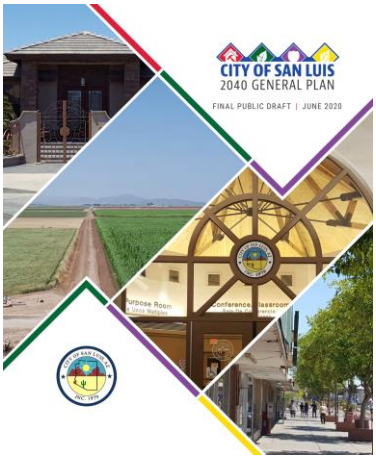

The *City of San Luis General Plan* guides local government policy and actions to meet the City's goals. Land use recommendations account for Downtown San Luis, binational influences, primary circulation routes, and land ownership. Growth areas and policies were established to promote development in appropriate areas and provide opportunities for natural growth of San Luis. The 'Central Growth Area' encompasses the area from Avenue F to east of Avenue E and north of the San Luis POE II to just north of SR 195. The growth area within the project study area is shown in **Figure 3**.

The Central Growth Area Is intended to guide a future activity center on SR 195 and a planned commercial and employment center at the POE. The growth area is aimed at capitalizing on regional traffic on SR 195 and commercial freight from the border crossing. The growth area is planned to include high-density residential, shopping, entertainment, and employment land uses. Near the POE, it is anticipated that commercial uses will be developed to support commercial freight traffic crossing, including transportation and warehousing companies.

Figure 3. San Luis Central Growth Area

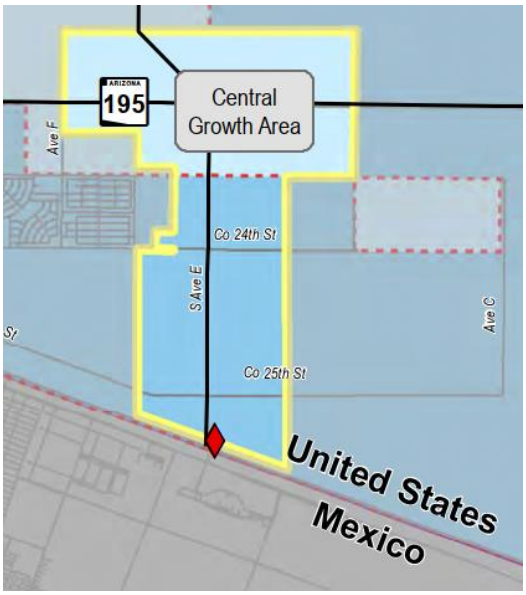

The General Plan developed a Circulation Plan to establish a vision for the transportation network. The Circulation Plan proposes future arterial roadways, in a grid pattern, north and east of San Luis II POE and west of Avenue A. The planned circulation changes in San Luis are shown in **Figure 4**.

Figure 4. San Luis Circulation Plan

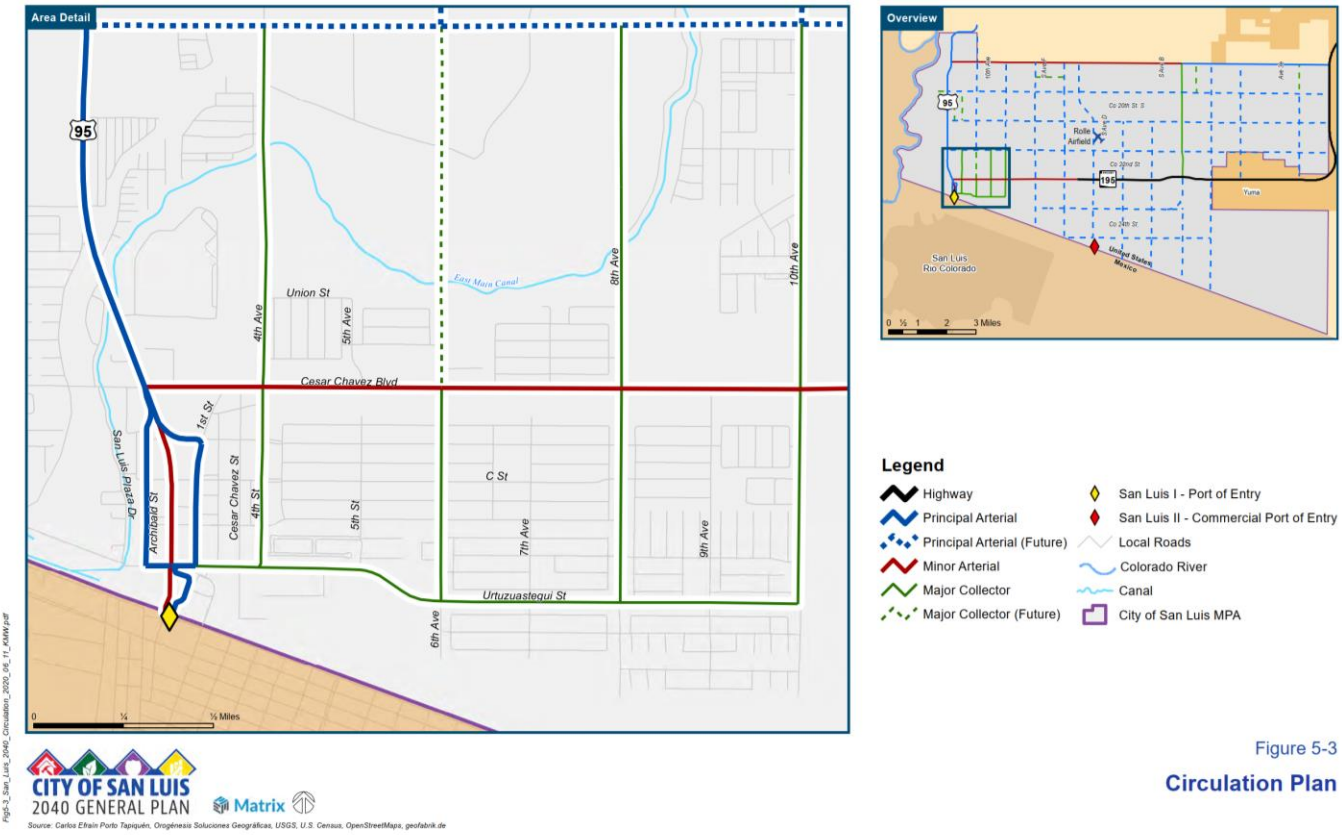

Figure 5-3
Circulation Plan

The General Plan references the Yuma County Rail Study, which assessed the feasibility of a rail corridor between Sonora, Mexico and Yuma County, stating that the addition of a rail alignment has potential for positive effects on economic development in the City.

Somerton General Plan (*Draft, 2020*)

The *Somerton General Plan* was drafted in 2020 and is intended to guide development within the City over the next 20 years. The future land use plan denotes the portion of Somerton within the project study area to be designated as agricultural land. The General Plan identified a growth area to focus development within the city, which is not within the project study area. There are no roadway circulation improvements identified within the project study area.

Yuma County Comprehensive Plan

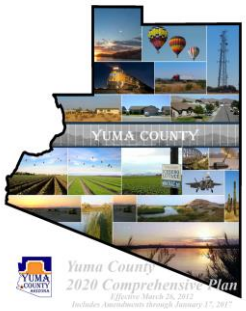

The *Yuma County Comprehensive General Plan* was ratified in 2020 and was developed to aid Yuma County in preserving the natural beauty of the community and to improve quality of life for all residents. Designated planning areas were established to allow for an in-depth understanding of specific regions of the county. The Yuma Mesa Planning Area, which forms a large portion of the project study area, aims to retain rural and agricultural activity and limit commercial and industrial development.

The Goldwater AFR has a buffer area that constraints land use on surrounding land. The buffer and the allowable land use are shown in **Figure 5**.

Figure 5. Goldwater AFR Buffer Area Land Use Limitation

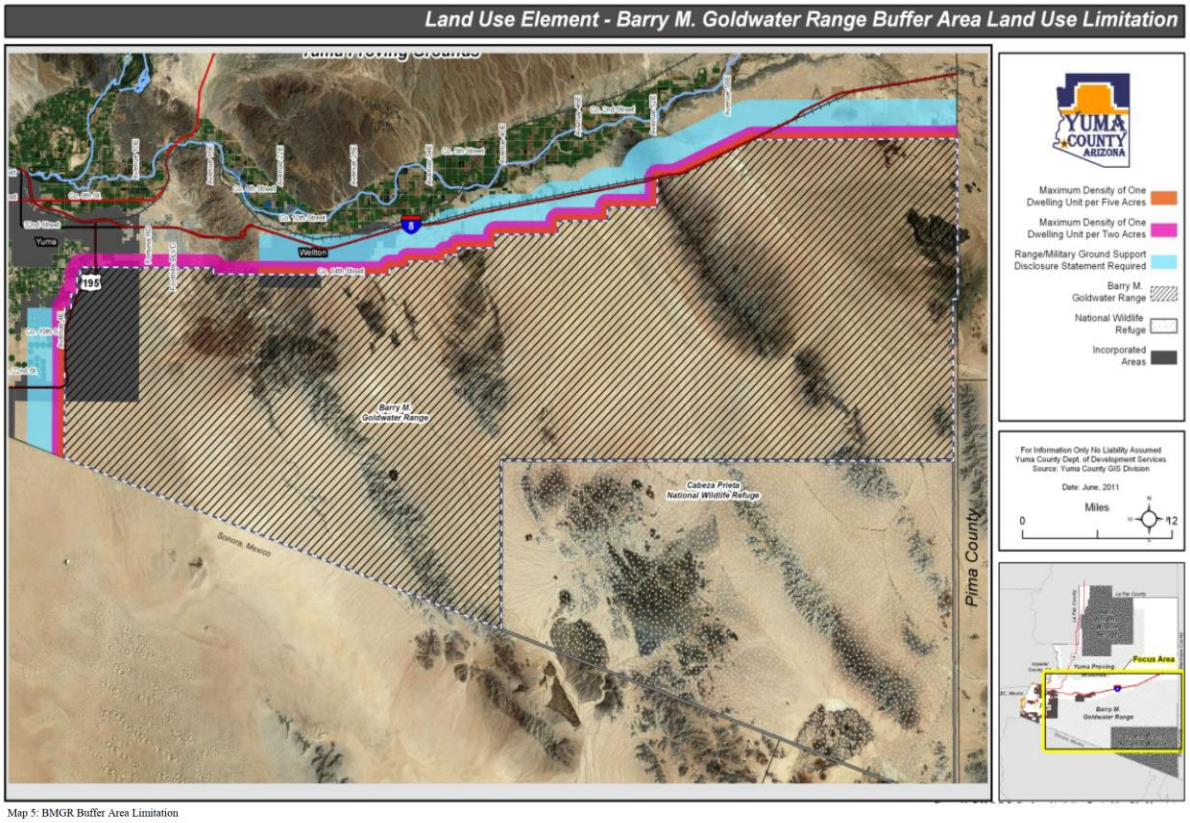

Map 5: BMGR Buffer Area Limitation

YMPO Long-Range Transportation Plan

The *YMPO Long-Range Transportation Plan (LRTP)* was developed to assess regional transportation performance and needs, create improvement and implementation plans for the MPO, and implement policies that prioritize and implement projects that address safety, pavement, mobility, bridge, and freight needs within Yuma County.

The Plan identifies the importance of freight mobility for the region, stating that the efficient movement of freight is important to the region's economic growth, especially due to sharing borders with both California and Mexico. The Plan mentions the YMPO Rail/Heavy Freight Corridor Alignment Study, stating that the addition of the rail corridor will produce a safe and efficient freight transportation network and provide regional connectivity between Sonora, Mexico, and the greater Yuma area.

The YMPO LRTP designated SR 195 as an overweight truck route as well as a hazardous cargo route. Roadway improvements and new roadways are planned within the YMPO region. New roadways in the study area include:

- A connection of Avenue D and Avenue E from SR 195 to County 18th Street.
- A new connection from County 25th Street and Avenue E to SR 195 and Avenue B.
- Completion of County 14th Street between SR 195 and Foothills Boulevard.
- Completion of 40th Street between SR 195 and Avenue 10E.

The proposed improvements to roadway circulation within YMPO and the study area are shown in **Figure 6**.

Figure 6. YMPO LRTP Roadway Circulation Plan

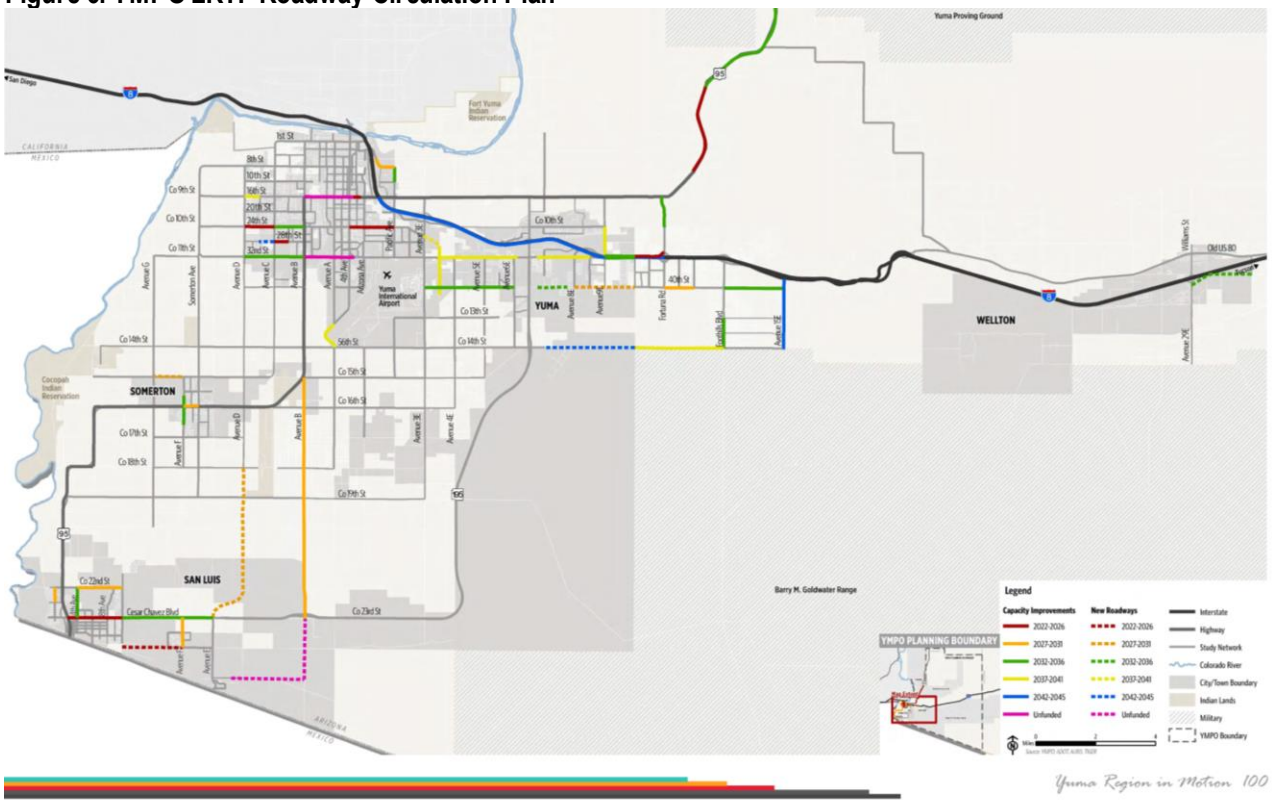

Arizona Border Master Plan

The *Arizona-Sonora Border Master Plan*, completed in 2013, provides a roadmap for improving efficiency and effectiveness of the transportation system between Arizona and Sonora, Mexico. The plan evaluated a variety of multimodal transportation projects along the Arizona-Sonora border, including POE projects, multimodal infrastructure, and rail projects. Projects were evaluated by:

- Cost.
- Project readiness.
- Capacity.
- Regional benefits.
- POE connectivity.

A new north-south rail connection located near the San Luis II POE was evaluated as a potential project in this effort. Among eight rail projects evaluated in the plan, a new rail corridor at San Luis II ranked fifth, scoring well in POE connectivity, but scoring poorly for cost effectiveness and project readiness.

Many of the projects in the 2013 Arizona-Senora Border Master Plan have been completed or are funded for construction. ADOT is currently updating this plan to re-evaluate projects that have not been implemented and to address new needs that have arisen since the 2013 plan was completed.

ADOT Arizona State Freight Plan: Arizona's Freight System (Draft, 2021)

The Arizona State Freight Plan is analyzing factors affecting freight use and performance, including population, workforce, technology, policy, and industry developments. The first working paper identifies the importance of Arizona's freight system in providing connectivity to California and neighboring states with high freight destination rates. The UPRR Sunset Route connects Southern California to both El Paso, Texas and Dallas, Texas, and attributes for a significant portion of the freight flow moving through the state.

Mexico was the second-largest trading partner for Arizona in both imports and exports, behind only California. The working paper identified the limited POE highway and rail capacity and limited roadway connections within the state as a weakness of the freight transportation system. These weaknesses result in poor reliability at the U.S./Mexico border.

ADOT Arizona State Freight Plan: Inventory of State Freight Transportation System Assets (Draft, 2021)

The *Inventory of State Freight Transportation System Assets Working Paper* assesses the existing conditions of the freight system within Arizona and its relation to transportation system demand, economic conditions, operations and maintenance, and funding availability.

I-8, including the segment running through the study area, is identified as a "key commerce corridor". The working paper identifies truck congestion bottlenecks throughout the state, classifying I-8 from the California border to US 95, just northwest of the project study area. The interstate is also identified as congested from US 95 to Avenue 3E.

There are no intermodal or transload operations facilities within the greater Yuma area, as the UPRR connects to intermodal rail terminals in Phoenix or Tucson. The assessment reports that the UPRR services more than 50 trains per day, with 14,400 carloads originating in Arizona and 77,700 terminating in the state.

The draft working paper recommended policies to improve existing freight flows, including the support of economic development through freight rail. Integration of freight rail as development occurs is important in supporting regional and statewide economic development. It is predicted that additional freight rail capacity may mitigated highway related capacity issues in addition to the economic development benefits.

Sonora Crossing Electric Transmission Line Project

The Sonora Crossing is a proposed 230 kV powerline project that would connect a new substation in eastern Yuma, named the Orchard Substation, with the San Luis Rio Colorado Industrial Park located on the east side of San Luis Rio Colorado, Sonora, Mexico. Sonora Crossing is being pursued by a private developer of electric transmission infrastructure called TransCanyon. The project would provide additional power capacity and system redundancy to the power system in southern Yuma County and San Luis to accommodate growing demand as well as provide a connection across the Mexican border to provide additional reliability to the growing industrial park in San Luis Rio Colorado.

Arizona Public Service (APS), the power utility that provides service to the area, is coordinating with TransCanyon, and is constructing a new transmission line from its existing North Gila Substation to the new Orchard Substation.

Figure 7 shows the proposed alignment of the Sonora Crossing project from the Orchard Substation to the San Luis Rio Colorado Industrial Park as well as the APS project to connect the North Gila and Orchard Substations. This alignment could provide an opportunity to co-locate electrical transmission and rail infrastructure in a single right-of-way.

Figure 7. Planned Sonora Crossing Transmission Line Alternative Alignments

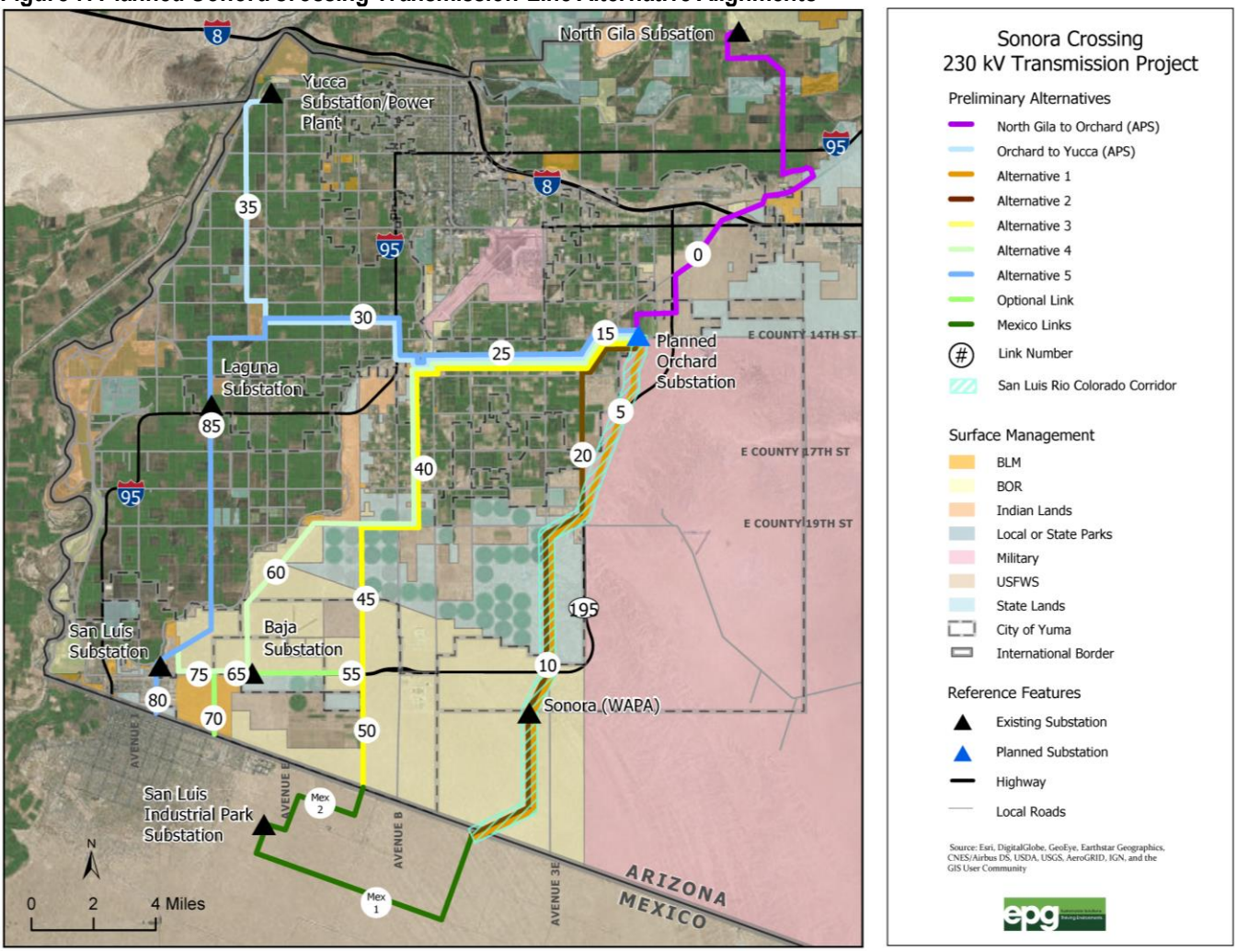

Source: TransCanyon

Feasibility Study for Natural Gas Distribution in San Luis

A feasibility study to extend a natural gas pipeline from Yuma to San Luis to provide distribution and service to City of San Luis was conducted to determine if it is economically feasible to provide this service to San Luis residents and businesses. Based on the growth of San Luis and the balance of land uses, it was determined that an investment to expand natural gas service and build a compressed natural gas station could be recouped within 10 to 12 years and would provide economic and environmental benefits to the area.

A specific alignment for a natural gas pipeline extension was not determined but would need to extend from approximately Avenue 2E and County 19th Street to San Luis. This alignment could provide an opportunity to co-locate rail and natural gas infrastructure within the study area.

Opportunities and Constraints

Opportunities

- The Yuma General Plan and Yuma County Comprehensive Plan both discuss limiting residential growth near MCAS Yuma and the Goldwater AFR. These areas provide an opportunity to route the freight rail where it will have minimal impact on nearby homes.
- The San Luis General Plan is supportive of a freight rail connection with Mexico and planned land uses in eastern San Luis are supportive of a freight rail alignment.
- The Sonora Crossing and Natural Gas Feasibility Studies indicate a need for a north-south alignment to run additional utilities that could be co-located with rail to offset some of the cost of acquiring land for right-of-way.

Constraints

- The City of Yuma General Plan and Yuma County Comprehensive Plan envision rural density residential and farming to continue throughout much of the study area, while discouraging commercial and industrial development which is more supportive of freight rail.
- The Arizona-Senora Border Master Plan reviewed a potential north-south rail alignment in Yuma County and did not determine that it should be a top priority at the time.

3. Stakeholder Engagement

The Project Team engaged regional and industrial stakeholder to obtain stakeholder input on opportunities and constrains for a rail corridor within the study area. Brief virtual interviews were held to discuss:

- The purpose and need for a new north-south rail corridor.
- Land use opportunities and constraints.
- Active or ongoing projects or activities that may impact a rail corridor alignment.
- Possibility for rail alignment to follow existing utility or roadway facilities.

Interview groups and dates are shown in **Table 1**. Summaries of each of the stakeholder meetings is provided in **Appendix A**.

Table 1. Stakeholder Meeting Groups

Group	Agencies/Positions	Interview Date
Yuma County	Public Works, Economic Development, Development Services	December 1, 2021
ADOT	Multimodal Planning Division	December 3, 2021
City of Yuma	Economic Development, Utilities, Planning and Neighborhood Services	December 9, 2021
ADOT	Southwest District, Railroad Liaison	December 13, 2021
City of San Luis	Public Works, Economic Development	December 14, 2021
ADOT	Regional Planning	December 14, 2021
State of Sonora and San Luis Rio Colorado	Sonora Ministry of Economy, San Luis Rio Colorado Economic Development	December 15, 2021
APS	Division Mgmt., Construction/Maintenance, Right-of-Way	December 15, 2021
City of Yuma	Economic Development	December 16, 2021
Economic Development	Greater Yuma Port Authority, Yuma Chamber of Commerce	December 20, 2021
MCAS Yuma	Public Works, Community Liaison, Wildlife, Range Management, Range Training, Conservation	February 9, 2022
Other Mexican Stakeholders		November and December 2021

Opportunities and Constraints

The stakeholder interviews identified a series of opportunities and constraints associated with a north-south rail corridor in the study area:

Opportunities

- The extension of Avenue D/E to County 18th Street, as well as 40th Street and County 14th Street from Fortuna Road to Avenue 8E, may provide an opportunity to reduce costs by obtaining right-of-way for both the roadway and rail project together.
- The SR 195 alignment has right-of-way that was not used during construction. This remaining right-of-way may be practical for a rail alignment; however, utility or rail uses are currently prohibited by MCAS Yuma through the easement that was granted for the highway.
- Bureau of Land Management (BLM) and State Trust Land may be target areas for a rail alignment.
- Land near the intersection of Arby Road/SR 195 and County 14th Street is planned for industrial development, which is generally supportive of rail development.
- A large, currently vacant site at the northwest corner of the I-8 Frontage Road and Avenue 9E could serve as a location for an intermodal facility.

- APS is currently constructing a new powerline in the northeastern portion of the study area that may provide an opportunity for a rail alignment as right-of-way has already been secured. Additionally, the alignment of the TransCanyon line between the new APS line and the Mexico border could provide an opportunity to co-locate rail and power infrastructure.
- There has been an increase in international truck traffic originating at the Port of Ensenada to avoid California ports and trucking regulations, which could strengthen the economic case for constructing a new rail alignment through the Yuma region.
- The State of Sonora and the City of San Luis Rio Colorado are interested in exploring the potential for increased regional rail access and are willing to partner with their counterparts in Yuma County.

Constraints

- Development along I-8 has severely limited opportunities for connecting through the northern portion of the study area.
- The land north of the San Luis II POE is planned for residential development on both sides of Avenue E, which is incompatible with freight rail implementation.
- There have been plans to develop a spaceport near the intersection of SR 195 and Avenue B, which could limit potential rail alignments in the area.
- The Estancia area is likely to remain low-density residential and agricultural land, which is likely prohibitive for developing rail through this area.
- There is an endangered species with habitat in the area, the Flat-Tailed Horned Lizard, which requires a 6:1 compensation ratio for any disturbed area on the east side of SR 195.
- There are two World War II training ranges within the study area that cannot be impacted per the State Historic Preservation Office (SHPO).
- Grade separation between the rail line at County 14th and 19th Streets to mitigate any impact on military operations in the area.
- There is a concern that a rail line would impact Border Patrol operations and could invite vandalism to rail cars and trespassing.
- The San Luis II POE is well below capacity for commercial trucks and has ample space to expand, if necessary. SR 195 is also well below capacity. This excess capacity diminishes the need for developing a new rail connection.

4. Freight Flows

An understanding of existing and projected freight flows into and out of Yuma County aids in determining if there is sufficient economic demand to justify an investment in additional rail infrastructure. Freight flows were obtained from the Transearch database, developed by IHS Markit and purchased by YMPO for use in the Rail/Heavy Freight Alignment Study. The latest freight estimates available are for the year 2019 and future forecasted freight flows are available through 2045.

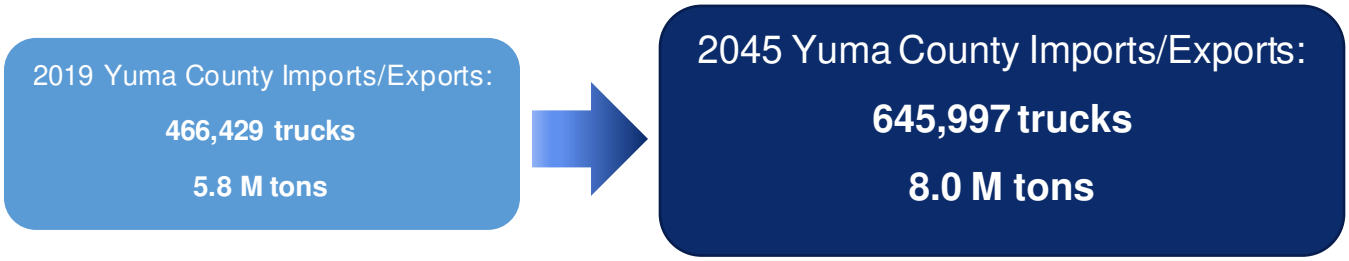

Largest Trading Partners

Table 2 shows the largest trading partners with Yuma County. The overall amount of freight generated and consumed by Yuma County is anticipated to increase by over 38% between 2019 and 2045. The Los Angeles, CA Business Economic Area (BEA[1]) is the region's largest trading partner and is anticipated to continue to be the largest trading partner through 2045. Currently, the San Diego, CA BEA is Yuma County's second largest trading partner, but is anticipated to be surpassed by Maricopa County, AZ and trade internally within Yuma County by 2045.

Table 2. Forecasted Growth in Freight by Trading Partner

Trading Partner	2019				2045			
	Trucks	% Total	Tons	% Total	Trucks	% Total	Tons	% Total
Los Angeles, CA BEA	175,738	37.7%	2,112,533	36.4%	226,681	35.1%	2,655,870	33.3%
San Diego, CA BEA	72,711	15.6%	840,127	14.5%	76,112	11.8%	787,617	9.9%
Yuma County, AZ	70,140	15.0%	595,106	10.3%	92,522	14.3%	683,414	8.6%
Maricopa County, AZ	60,571	13.0%	734,414	12.7%	104,531	16.2%	1,331,192	16.7%
Pima County, AZ	12,094	2.6%	147,268	2.5%	20,339	3.1%	256,715	3.2%
Pinal County, AZ	8,357	1.8%	103,354	1.8%	13,180	2.0%	151,037	1.9%
San Francisco, CA BEA	6,783	1.5%	135,404	2.3%	14,863	2.3%	298,611	3.7%
Mexico Other	5,147	1.1%	99,986	1.7%	11,326	1.8%	217,340	2.7%
La Paz County, AZ	4,982	1.1%	41,845	0.7%	9,572	1.5%	79,613	1.0%
Fresno, CA BEA	4,432	1.0%	85,658	1.5%	7,229	1.1%	140,794	1.8%
Las Vegas, NV BEA	4,206	0.9%	71,605	1.2%	6,867	1.1%	116,891	1.5%
Mohave County, AZ	3,479	0.7%	33,104	0.6%	5,437	0.8%	51,367	0.6%
Seattle, WA BEA	1,864	0.4%	45,512	0.8%	2,585	0.4%	61,689	0.8%
Salt Lake City, UT BEA	1,649	0.4%	30,835	0.5%	2,735	0.4%	52,584	0.7%
Sacramento, CA BEA	1,326	0.3%	26,292	0.5%	2,469	0.4%	49,000	0.6%

[1] A Business Economic Area (BEA) is a collection of counties as designated by the U.S. Bureau of Economic Analysis, centered around a metropolitan area, along with surrounding counties that are economically tied to that area.

Trading Partner	2019				2045			
	Trucks	% Total	Tons	% Total	Trucks	% Total	Tons	% Total
Yavapai County, AZ	1,250	0.3%	23,660	0.4%	2,105	0.3%	40,567	0.5%
Cochise County, AZ	1,187	0.3%	22,488	0.4%	1,253	0.2%	23,932	0.3%
Dallas, TX BEA	1,161	0.2%	23,814	0.4%	1,646	0.3%	33,711	0.4%
Portland, OR BEA	1,158	0.2%	25,950	0.4%	1,562	0.2%	34,432	0.4%
Sonora	989	0.2%	34,326	0.6%	1,868	0.3%	60,391	0.8%
All Other	27,206	5.8%	564,217	9.7%	41,116	6.4%	853,358	10.7%
TOTAL	**466,429**		**5,797,499**		**645,997**		**7,980,125**	

Source: IHS Markit Transearch Database

Major Commodities

Table 3 shows the top commodities imported to and exported from Yuma County. Gravel or Sand, Miscellaneous Waste or Scrap, and Warehouse/Distribution Center products are the top three commodities imported to and exported from Yuma County. Warehouse/Distribution Center products are anticipated to grow substantially to become the top commodity in Yuma County by 2045.

Table 3. Forecasted Growth in Freight by Commodity

Commodity	2019				2045			
	Trucks	% Total	Tons	% Total	Trucks	% Total	Tons	% Total
Semi-trailers (Empty)	210,719	45.2%	0	0.0%	285,124	44.1%	0	0.0%
Gravel or Sand	76,701	16.4%	1,864,631	32.2%	69,695	10.8%	1,694,316	21.2%
Misc. Waste or Scrap	36,078	7.7%	969,049	16.7%	42,498	6.6%	1,141,490	14.3%
Warehouse/Distr. Ctr.	26,029	5.6%	535,115	9.2%	86,982	13.5%	1,788,199	22.4%
Misc. Field Crops	22,323	4.8%	461,716	8.0%	21,418	3.3%	443,037	5.5%
Petrol. Refining Prod.	9,077	1.9%	221,594	3.8%	8,850	1.4%	216,065	2.7%
Broken Stone or Riprap	8,916	1.9%	216,751	3.7%	11,090	1.7%	269,608	3.4%
Grain	8,596	1.8%	132,879	2.3%	7,970	1.2%	123,511	1.5%
Asphalt Paving Blocks/Mix	5,601	1.2%	130,169	2.2%	8,757	1.4%	203,526	2.5%
Misc. Fresh Vegetables	5,236	1.1%	111,593	1.9%	6,811	1.1%	145,166	1.8%
Misc. Food Preparations	4,740	1.0%	108,919	1.9%	9,418	1.5%	216,433	2.7%
Concrete Products	4,064	0.9%	61,922	1.1%	7,617	1.2%	116,075	1.5%
Leafy Fresh Vegetables	3,748	0.8%	80,264	1.4%	3,317	0.5%	71,041	0.9%
Containers or Boxes	2,805	0.6%	67,125	1.2%	9,699	1.5%	231,730	2.9%
Misc. Plastic Products	2,383	0.5%	28,070	0.5%	6,072	0.9%	71,526	0.9%
Citrus Fruits	2,319	0.5%	49,424	0.9%	2,334	0.4%	49,743	0.6%
Ready-mix Concrete	1,689	0.4%	26,400	0.5%	2,530	0.4%	39,538	0.5%
Oil Kernels/Nuts/Seeds	1,676	0.4%	25,860	0.4%	1,727	0.3%	26,657	0.3%
Paper Waste or Scrap	1,597	0.3%	34,021	0.6%	1,440	0.2%	30,664	0.4%
Animal By-prod.	1,515	0.3%	36,214	0.6%	2,391	0.4%	57,217	0.7%
All Other	30,662	6.6%	636,864	11.0%	50,353	7.8%	1,047,188	13.1%
TOTAL	**466,474**		**5,798,581**		**646,093**		**7,982,728**	

Source: IHS Markit Transearch Database

International Imports and Exports

Freight flows between Yuma County and Mexico are particularly important in building a case for constructing a new north-south rail line across the U.S./Mexico border. **Table 4** shows the top imports and exports between Yuma County and Mexico. The top exports are containers or boxes, yarn, and horticultural specialties. The top imports are miscellaneous fresh vegetables, farm products, and tropical fruits.

Table 4. Imports and Exports between Yuma County and Mexico

Exports to Mexico					Imports from Mexico				
Year	2019		2045		Year	2019		2045	
Commodity	Trucks	Tons	Trucks	Tons	Commodity	Trucks	Tons	Trucks	Tons
Containers or Boxes	414	10,065	562	13,673	Misc Fresh Vegetables	2,467	52,578	4,322	92,108
Yarn	167	3,556	423	9,029	Farm Products	1,483	22,868	3,679	56,742
Horticultural Specialties	110	1,701	292	4,497	Tropical Fruits	381	7,937	946	19,693
Leafy Fresh Vegetables	55	1,187	85	1,821	Bulbs,roots or Tubers	275	5,732	717	14,973
Meat, Fresh or Chilled	48	1,112	164	3,756	Leafy Fresh Vegetables	268	5,743	744	15,927
Radio or TV Rcvg. Sets	48	814	49	827	Misc Indus Inorganic Chemicals	203	17,925	322	28,353
Animal By-prod,	28	1,342	43	2,083	Citrus Fruits	149	3,169	384	8,182
Vehicle Parts or	23	436	58	1,109	Misc Fresh Fruits or Tree Nuts	132	2,783	446	9,383
Misc. Field Crops	12	273	35	767	Horticultural Specialties	85	1,314	223	3,433
Pulp or Pulp Mill Prod.	11	1,036	16	1,457	Electrical Equipment	83	1,386	265	4,407
Misc. Food Prep.	11	309	23	652	Radio or Tv Receiving Sets	83	1,416	5	92
Misc Printed Matter	11	192	15	263	Elec Eq For Intern Comb Engine	79	1,253	250	3,983
Rubber or Plastic Scrap	11	128	29	343	Malt Liquors	65	2,157	187	6,191
Games or Toys	9	183	18	341	Misc Plastic Products	47	593	132	1,655
Lumber or Dimension Stock	9	809	22	1,947	Grain	47	907	83	1,599
Misc Plastic Products	9	107	18	210	Misc Manufacturing Products	44	856	101	1,975
Dehydr or Dried Fruit/Veg	8	180	0	9	Asphalt Coatings or Felt	38	930	100	2,443
Electronic Data Proc Equipment	7	98	11	152	Sugar, Refined, Cane or Beet	35	820	92	2,119
Misc Indus Inorganic Chemicals	7	576	19	1,708	Field Seeds	34	517	72	1,105
Misc Fresh Vegetables	6	138	10	203	Frozen Fruit, Veg or Juice	31	714	75	1,723
All Other	87	2,233	185	4,667	All Other	471	11,215	1,224	28,635
TOTAL	**1,092**	**26,477**	**2,075**	**49,513**	**TOTAL**	**6,500**	**142,811**	**14,367**	**304,721**

Source: IHS Markit Transearch Database

Trade Through Yuma

The imports and exports generated by Yuma County account for only a small percentage of the total freight flows that go through Yuma County. The County's location on I-8 and along the border with Mexico makes it a key location for long-distance and international freight movement. This through travel could also be a target for converting trips from trucks to rail. The total amount of freight traveling through Yuma County (not originating or ending in the county), is anticipated to increase from 8.7 million trucks annually to 13.3 million trucks, an increase of 56% between 2019 and 2045.

2019 Freight through Yuma County:
8.7 M trucks
96.6 M tons

→

2045 Freight through Yuma County:
13.3 M trucks
135.2 M tons

International trade with Mexico that passes through Yuma County is of particular importance in determining if there is an economic case for constructing a new north/south rail alignment that crosses the U.S./Mexico border. As of 2019, over 220,000 trucks pass through Yuma County either from or bound for Mexico. That number is projected to more than double, to nearly 600,000 annual trucks by 2045.

2019 Trade with Mexico through Yuma County:
221,943 trucks
4.2 M tons

→

2045 Trade with Mexico through Yuma County:
591,079 trucks
11.0 M tons

Based on discussions with IHS Markit, the creators of the Transearch database, all goods traveling over 500 miles could be a candidate for converting from truck to rail travel. Goods traveling between 250 and 500 miles could potentially switch modes depending on the commodity or locations. Goods traveling under 250 miles would likely not convert to rail unless it is a particularly high volume between one destination and another.

Opportunities and Constraints

Opportunities

- Freight flows originating or ending in Yuma County are anticipated to increase by over 38% from 2019 to 2045 and I-8 is already considered congestion for freight travel.
- Imports and exports between Yuma County and Mexico are anticipated to increase by 117% by 2045.
- Freight flows through Yuma County, not including imports and exports to the region, is anticipated to increase by 56% by 2045.
- Freight flows with Mexico that go through Yuma County, not including the imports and exports with Yuma County, are anticipated increase by 166% between 2019 and 2045.

Constraints

- The largest trading partners with Yuma County are less than 250 miles away (Los Angeles, San Diego, and Maricopa County), which are not good candidates for converting from truck to rail freight.
- Some of the largest commodities in Yuma County are perishable, which are less likely to convert from truck to rail travel due to the longer shipping timeframes.

5. Transportation System

Existing Rail Network

The UPRR Sunset Route is a Class I railway, spanning from California to Louisiana. **Figure 8** shows the UPRR Sunset Route mainline alignment through the Yuma area along with spurs from the mainline. West of Araby Road, the mainline roughly parallels I-8 through central Yuma and into California. To the east of Araby Road, the mainline curves northward to follow the Gila River before rejoining I-8 near Wellton.

Figure 8. UPRR Sunset Line Alignment

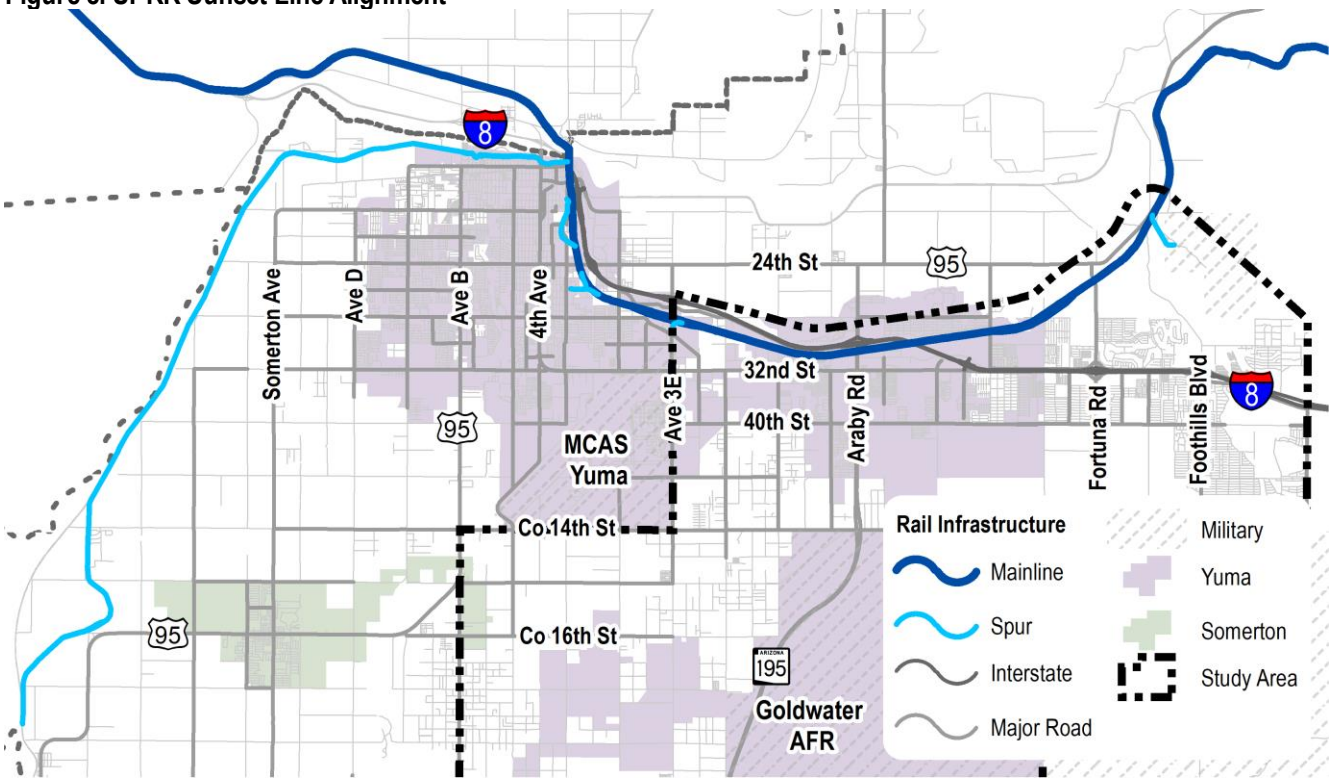

Source: U.S. Census Bureau

There is one major spur from the UPRR mainline near the study area that begins in downtown Yuma and generally follows the Colorado River to the west of Yuma and Somerton ending near County 18th Street southwest of Somerton. This spur is generally in poor condition and is on soils that may not be suitable for frequent trains. Several additional small spurs are present in the Yuma area including:

- South of downtown Yuma on the west side of the UPRR mainline in the vicinity of 10th Street.
- South of downtown Yuma on the west side of the UPRR mainline in the vicinity of 20th Street.
- South of the UPRR mainline on the east side of Avenue 3E extending to just north of 32nd Street.
- South of the UPRR mainline near US 95 and Rifle Range Road.

These spurs could provide an opportunity for connecting to the UPRR Sunset Route.

Existing and Planned Regional Roadway System

The existing roadway network within the Study Area can be defined by roadway functional classification, provided by ADOT Arizona Traffic Information System (ATIS) database. Functional classification provides a standard that classifies roadways and highways according to access and use. Classification is determined by mobility and access characteristics to determine the hierarchy of the roadway.

Three main functional classes are defined by FHWA; arterial, collector, and local based on a roadway's speed, vehicle capacity, and relationships with the surrounding roadways network. The federal function classification map for the study area is shown in **Figure 9** along with planned future connections and their assumed federal functional classifications.

Figure 9. Functional Classification

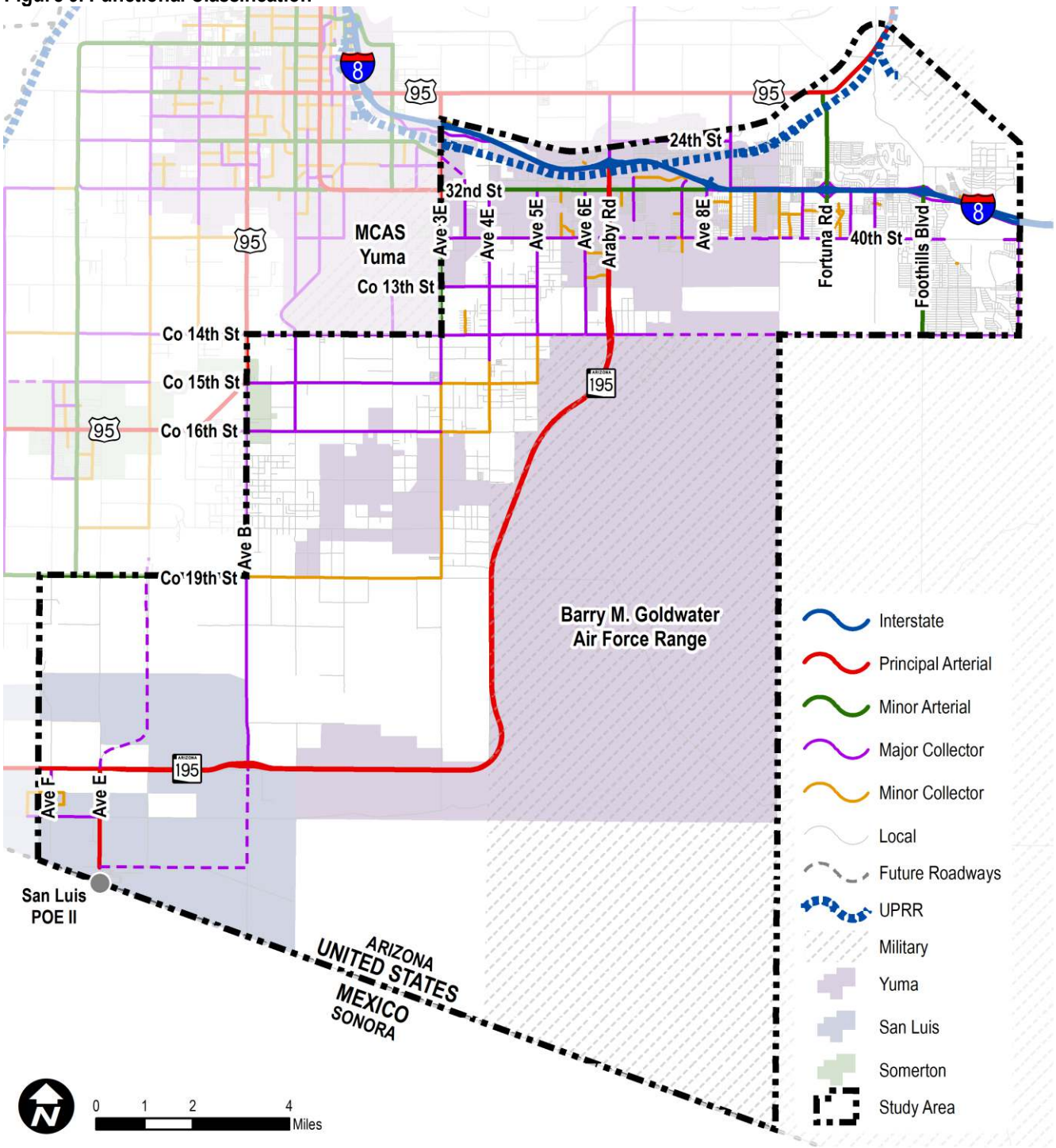

Source: ADOT, YMPO, City of Yuma, Yuma County

I-8 runs through the study area and is classified as an interstate. SR 195 (Araby Road) and Avenue E in San Luis are the highest classified roadways in the study area as the only principal arterials. 32nd Street is another major regional roadway, classified as a minor arterial. These major roadways may provide an opportunity for aligning a new freight rail system as they are intended to provide only limited access to adjacent land.

Several new major roadway connections are planned within the study area which could provide an opportunity to acquire additional right-of-way for a rail alignment. New roadway connections include:

- Avenue E/Avenue D between SR 195 and County 19th Street.
- A new roadway connecting the San Luis II POE with SR 195 at Avenue B.
- County 14th Street from SR 195 to Foothills Boulevard.
- 40th Street from Avenue 6E to Avenue 10E.

Existing and Planned Trail System

Existing and proposed shared-use pathways within the study area are shown in **Figure 10**. The only existing trail in the study area is on 32nd Street between Avenue 7E and Avenue 9E. Additional trails are proposed on:

- 32nd Street from Avenue 3E to the existing trail beginning at Avenue 7E.
- Avenue 3E from Avenue B to Avenue 4E.
- County 15th Street from Avenue B to Avenue 4E.
- North of I-8 following the interstate alignment.

There is one roadway with bike lanes within the study area, Avenue 8½E. Most major roadways within the study area have proposed bicycle lanes, per the YMPO LRTP 2045. The planned trails and bicycle lanes could be constraints to implementing rail as pedestrian interaction with the rail line should be as limited as possible and bicycle crossings of freight rail lines can cause safety hazards.

Opportunities and Constraints

The following are locations that enable or prohibit future rail alternatives based on the existing conditions analysis.

Opportunities

- The SR 195 alignment provides a continuous alignment with minimal interaction with other roadway facilities through most of the study area.
- The planned roadways in eastern San Luis (Avenue D/Avenue E connection and Connection from the San Luis II POE to SR 195 and Avenue B) and eastern Yuma (40th Street and County 14th Street extensions) could provide an opportunity to acquire right-of-way for the dual purpose of a railroad and new roadway.
- The existing spurs on the UPRR Sunset Route could provide an opportunity for a future alignment since they already intersect UPRR, and it would be easier to implement rail in locations where his has historically existed.

Constraints

- I-8 forms an east-west barrier that will likely require a grade separation of any future north-south rail alignment if it crosses I-8.
- The planned trails and bicycle lanes in the YMPO LRTP could be constraints to implementing a rail line because interaction between pedestrians, bicycles, and freight rail should be minimized.

Figure 10. Existing and Planned Multimodal Improvements

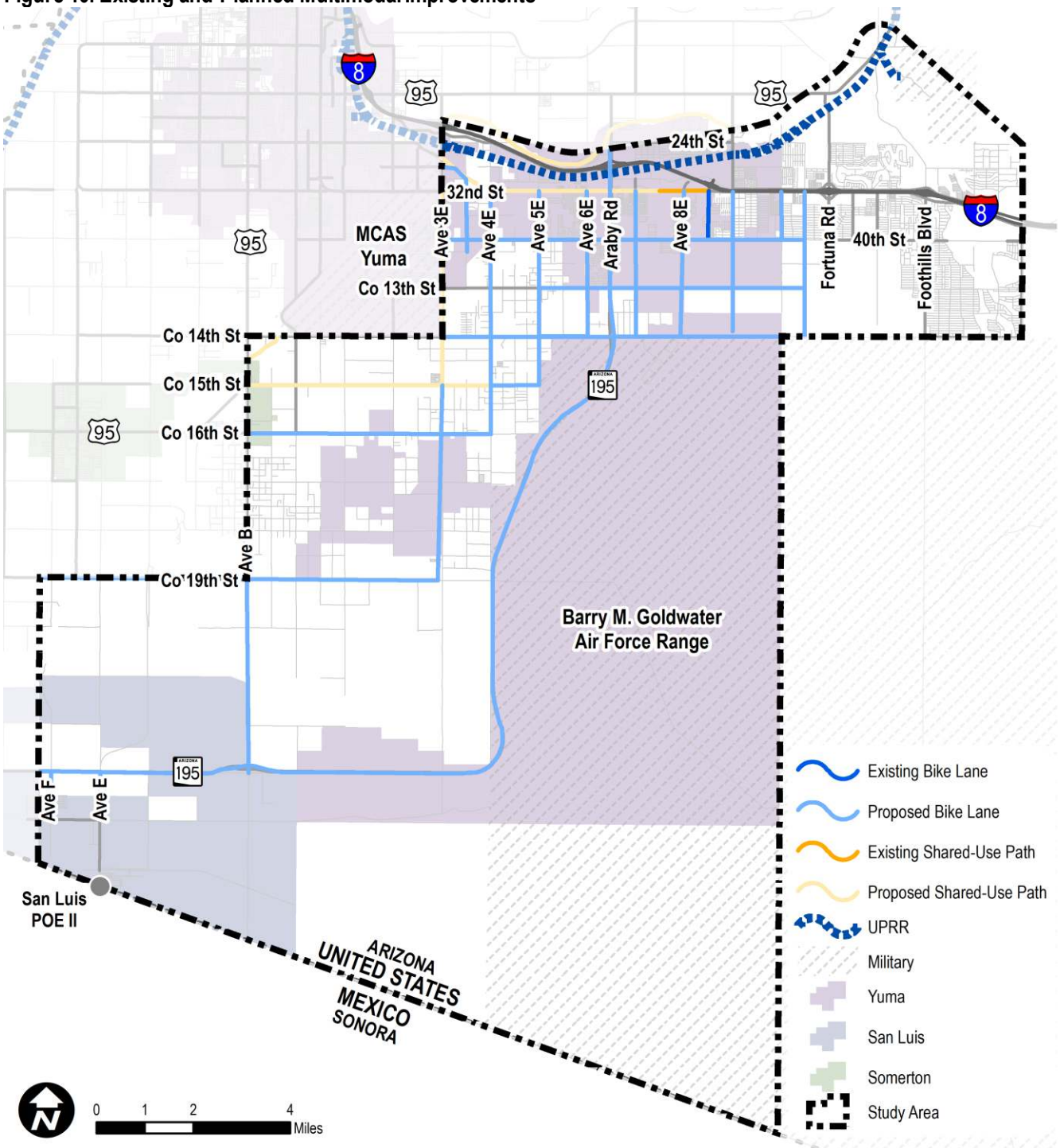

Source: YMPO

6. Future Land Use

Understanding future land uses envisioned by local governments within the study area is key to evaluating the potential impacts of potential rail alignments and what mitigation strategies may need to be planned for.

City of Yuma 'Yuma Mesa' Planning Area Land Use Map

The proposed future land use for the Yuma Mesa Planning Area is shown in **Figure 11**. Agriculture land on the outskirts of the city is anticipated to be maintained. Industrial land uses are envisioned between I-8 and 32nd Street. Agriculture and Industrial land use are planned to be adjacent to MCAS Yuma to the south and east. Rural-density residential is envisioned surrounding industrial and agricultural development.

Figure 11. City of Yuma Planning Area Future Land Use Map

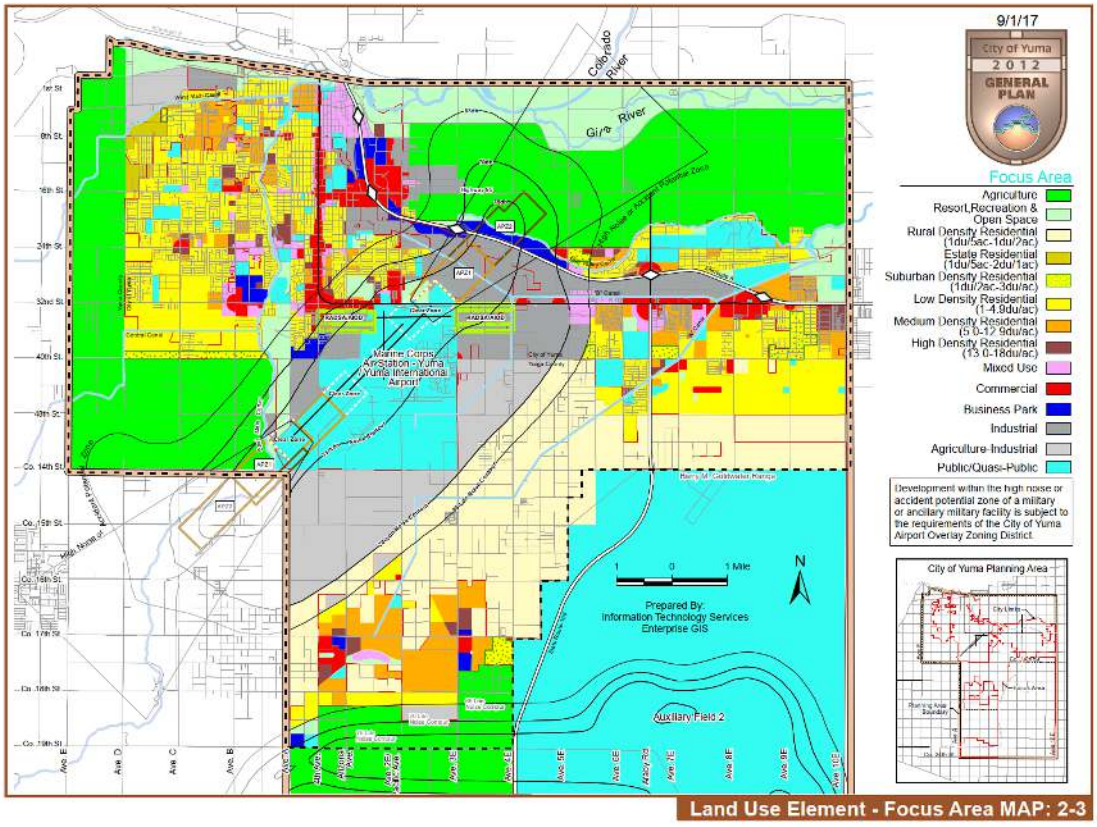

Source: City of Yuma General Plan

City of San Luis Future Land Use Plan

The City of San Luis's proposed land use plan is shown in **Figure 12**. Commercial and employment-focused developments are anticipated to surround the San Luis II POE. Residential land is anticipated in the far southeast portion of San Luis. The agriculture land in the northeast of the city is planned to be maintained into the future.

Figure 12. City of San Luis Future Land Use Plan

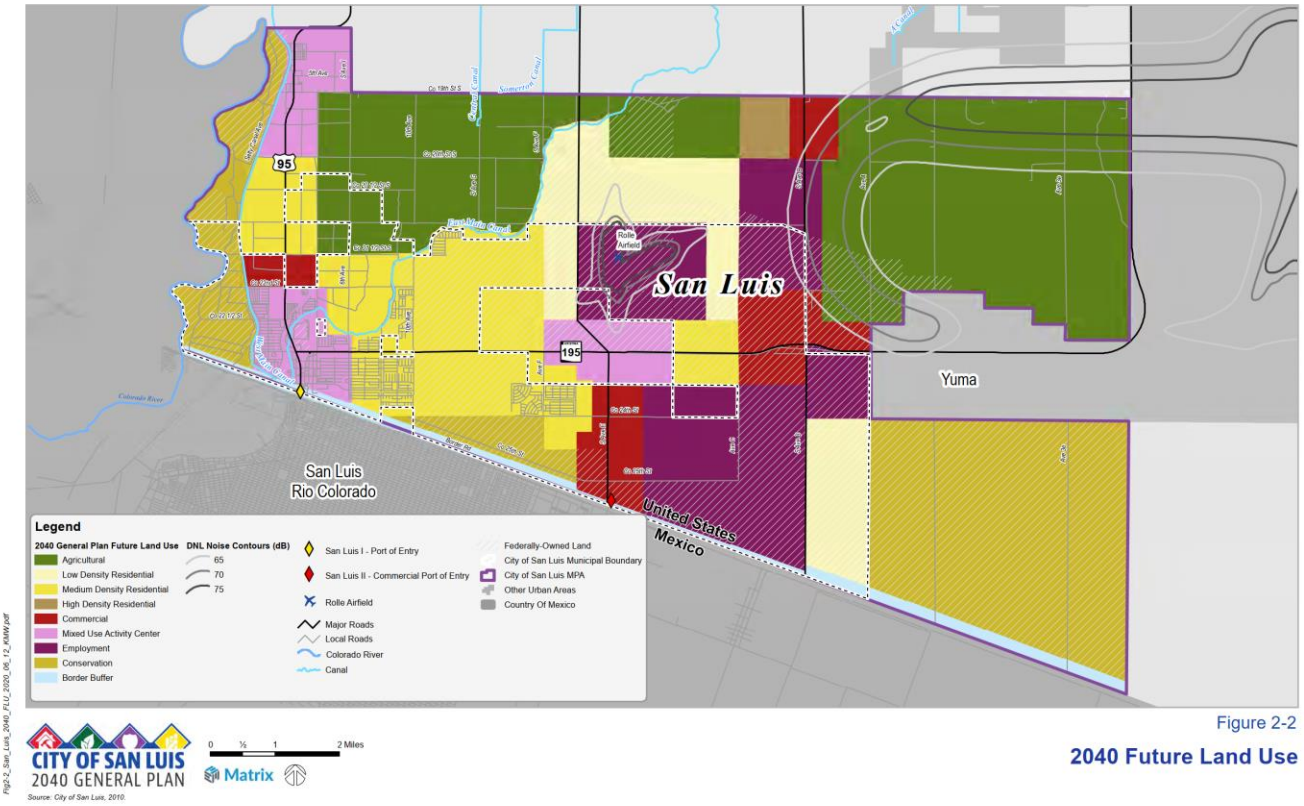

Source: City of San Luis General Plan

City of Somerton Future Land Use Plan

The City of Somerton's Future Land Use Plan is shown in **Figure 13**. The land within the project study is planned for agricultural/industrial use, with a small portion of commercial land adjacent to the study area boundary.

Figure 13. City of Somerton Future Land Use Plan

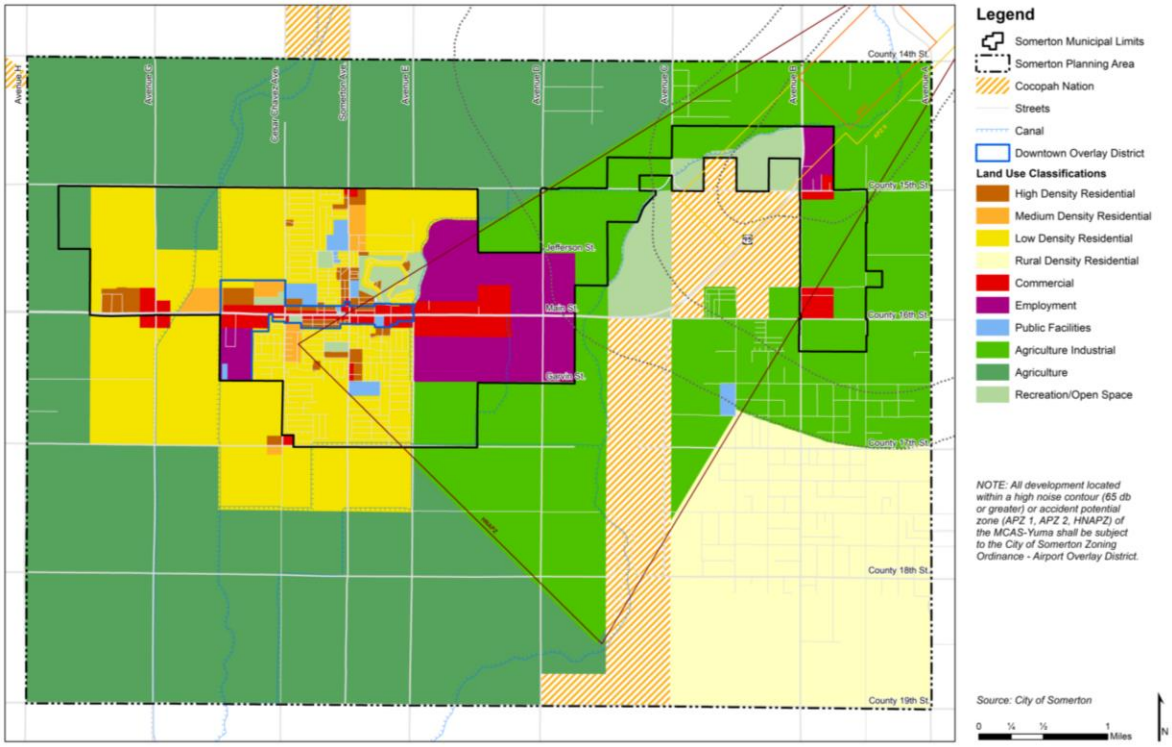

Source: City of Somerton General Plan

Yuma County

The Yuma County Comprehensive Plan proposed the future land use plan for the Yuma Mesa Planning Area, that is encompassed within the project study area. The proposed land use is shown in **Figure 14**. The land just south of Yuma city limits, adjacent to the Goldwater AFR is anticipated to be rural density residential and remain agricultural to the south. This will result in minimal planned development south of Yuma. Land at the border of Arizona and Sonora, adjacent to the Goldwater AFR is denotated as a sensitive area/resource land and will remain undeveloped.

Figure 14. Yuma County Yuma Mesa Future Land Use Plan

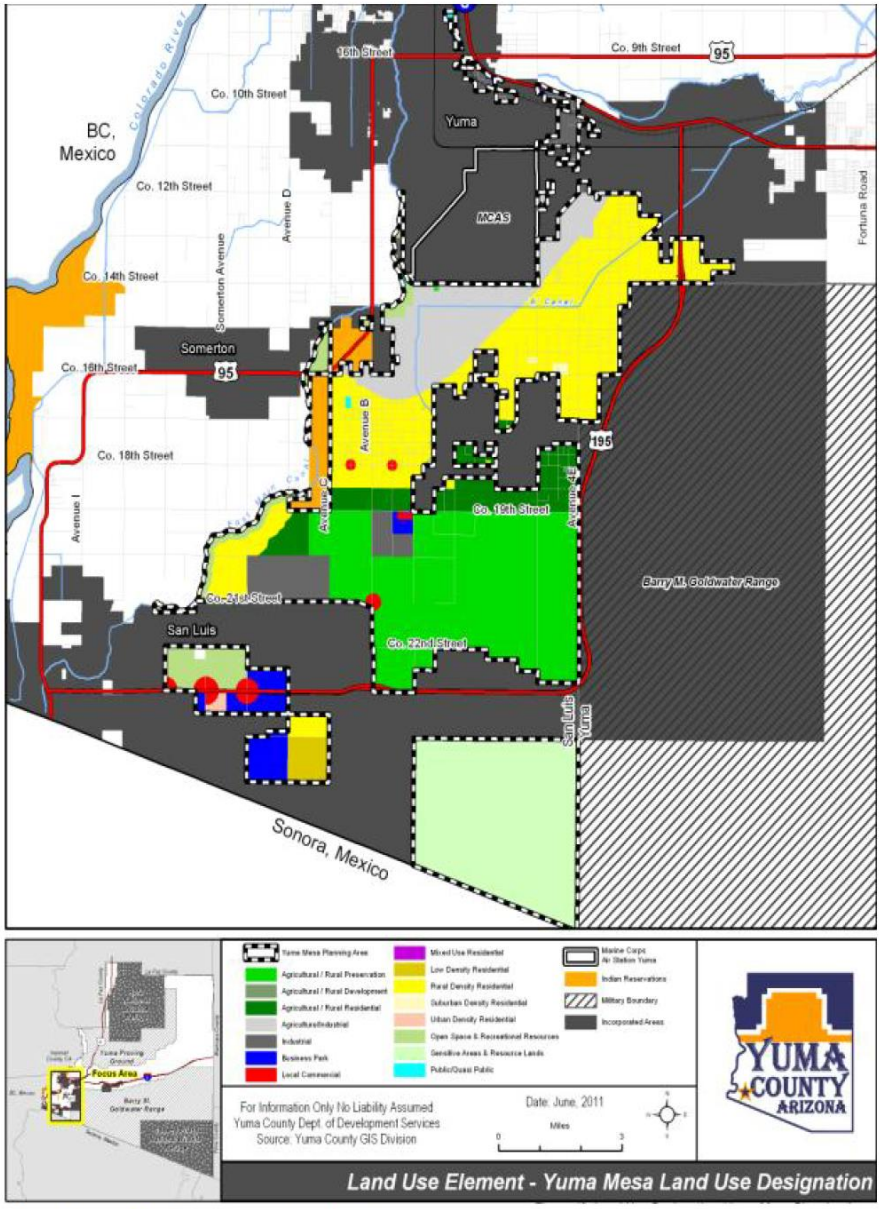

Map 17: Yuma Mesa Planning Area Land Use Designations

Yuma County 2020 Comprehensive Plan *Section Three - 58*

Source: Yuma County 2020 Comprehensive Plan

Composite Future Land Use

The future land use plans from City of Yuma, City of San Luis, City of Somerton, and Yuma County were compiled into a composite future land use map applied to the study area as shown in **Figure 15**. Industrial land use opportunities are just south and east of the Marine Corps Air Station as well as following the I-8 corridor to the west of Araby Road. Land north and to the west of the Goldwater AFR is constrained by rural density residential and agricultural land.

Figure 15. Composite Future Land Use Map

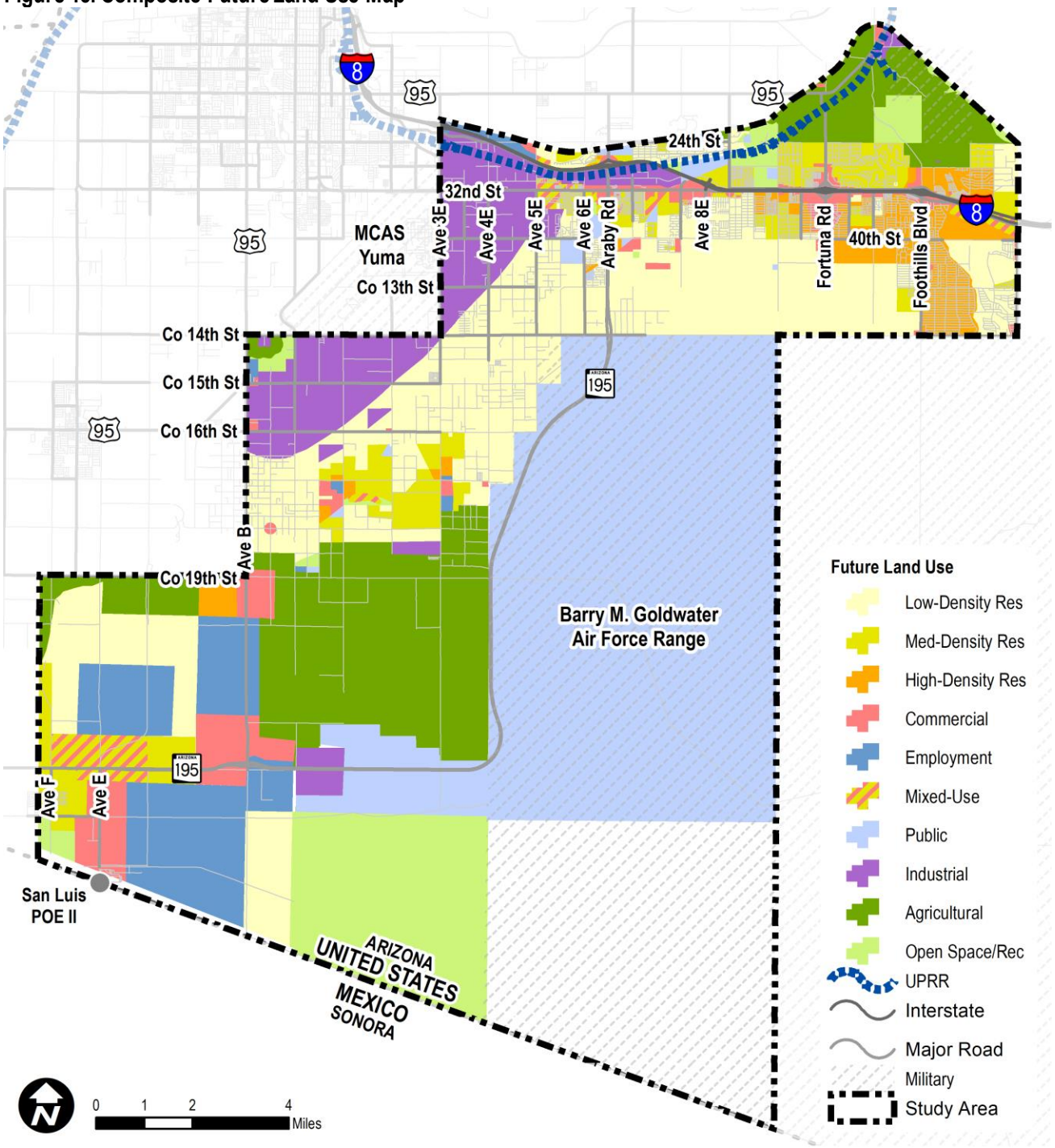

Opportunities and Constraints

Opportunities

- Land uses that are generally favorable to rail development, such as industrial or employment-focused land uses, are envisioned for areas around the San Luis II POE, near MCAS Yuma, and along the I-8 corridor west of Avenue 8½E.

Constraints

- Land uses that are unfavorable to rail development, such as residential and agricultural, are present throughout the central portion of the study area, along the SR 195 corridor, and along the I-8 corridor east of Avenue 8½E.

7. Environmental Overview

This Environmental Overview (EO) includes descriptions of the existing environmental resources within the study area. This EO also contains potential known environmental issues, constraints, and opportunities and will serve as a planning tool during improvement alternatives development and evaluation.

Biological Resources

According to *Biotic Communities, Southwestern United States and Northwestern Mexico*, the study area is within the Lower Colorado River Subdivision of the Sonoran Desertscrub biotic community[2]. The elevation of the study area ranges from 100 to 700 feet above mean sea level (MSL). An official species list for the study area was obtained from the U.S. Fish and Wildlife Service (USFWS) Information for Planning and Consultation (IPaC) system on December 21, 2021. The list included seven threatened, endangered or candidate species that should be evaluated for the study area:

- Sonoran Pronghorn (Antilocapra americana sonoriensis)
- Southwestern Willow (Flycatcher Empidonax traillii extimus)
- Yellow-billed Cuckoo (Coccyzus americanus)
- Yuma Ridgways Rail (Rallus obsoletus yumanensis)
- Sonoran Desert Tortoise (Gopherus morafkai)
- Razorback Sucker (Xyrauchen texanus)
- Flat-tailed Horned Lizard (Phrynosoma mcallii)

There is no federally designated Critical Habitat within the project area. The Arizona Game and Fish Department (AGFD) On-Line Environmental Review Tool (OERT) was accessed on December 21, 2021 to determine special status species known to occur in the project vicinity. The OERT report included eight state-listed species have been documented within three miles of the study area:

- Western Burrowing Owl (Athene cunicularia hypugaea)
- Resplendent Shovel-nosed Snake (Chionactis annulata)
- Western Yellow Bat (Lasiurus xanthinus)
- Rosy Boa (Lichanura roseofusca)
- California Leaf-nosed Bat (Macrotus californicus)
- Goode's Horned Lizard (Phrynosoma goodei)
- Yuma Hispid Cotton Rat (Sigmodon hispidus eremicus)
- Yuman Desert Fringe-toed Lizard (Uma rufopunctata)

During the environmental clearance process, biological resources should be evaluated and the USFWS list of threatened, endangered, proposed, and candidate species and AGFD OERT should be reviewed to determine if new species have been identified or any changes in listing status have occurred.

Wetland and Riparian Areas

According to the National Wetlands Inventory Wetlands Mapper[3], riverine (ephemeral washes) and freshwater forested/shrub wetland are within the study area. Potential impacts to these resources should be evaluated during the environmental clearance process.

[2] Conservation Biology Institute (CBI). Data Basin. Accessed January 4, 2022. https://databasin.org/datasets/e8e241e869054d7e810894e5e993625e/

[3] USFWS. 2022. National Wetlands Inventory Wetlands Mapper. Accessed January 4, 2022. https://www.fws.gov/wetlands/data/Mapper.html

Section 401/404 of the Clean Water Act

Based on a review of aerial photography, numerous named and unnamed ephemeral washes are present within the study area. It is anticipated that these features could be determined to be potentially jurisdictional Waters of the U.S. (WOTUS) by the Corps of Engineers (Corps). An evaluation to determine boundaries of WOTUS should be conducted during the design phase of the project through a Preliminary Jurisdictional Determination (PJD) to aid in avoiding and minimizing impacts to potential WOTUS. The project should be designed to avoid and minimize impacts to the extent practicable, and if there are unavoidable impacts to WOTUS, a Section 404/401 permit will be required.

Floodplain Encroachment

Based on a review of Federal Emergency Management Agency (FEMA) data, flood hazard areas (Zone A, AE, AO, and D) are depicted on FEMA Flood Insurance Rate Maps (FIRM):

- 06025C2275C (Map Effective Date: 09/26/2008)
- 04027C1530F, 04027C1555F, 04027C1560F (Map Effective Date: 01/16/2014)
- 04027C1540E, 04027C1545E, 04027C1565E, 04027C1570E, 04027C1835E, 04027C1840F, 04027C1845E, 04027C1855E, 04027C1860E, 04027C1865E, 04027C1870E, 04027C1880E, 04027C1890E, 04027C2200E, 04027C2155E, 04027C2160E, 04027C2225E (Map Effective Date: 08/28/2008).

Zones A, AE, and AO are shown in **Figure 16**; these locations represent areas that are within the 100-year floodplain and could be constraints to constructing a rail alignment. The floodplain areas are all located within the northeast area of the study area in the Fortuna Foothills area where runoff from the Gila Mountains has the potential for flooding typically dry washes.

Impacts to floodplains typically occur when the topography within a floodplain is substantially modified either by placement or removal of materials within the floodplain. This should be evaluated during the environmental clearance process.

Figure 16. 100-Year Floodplain

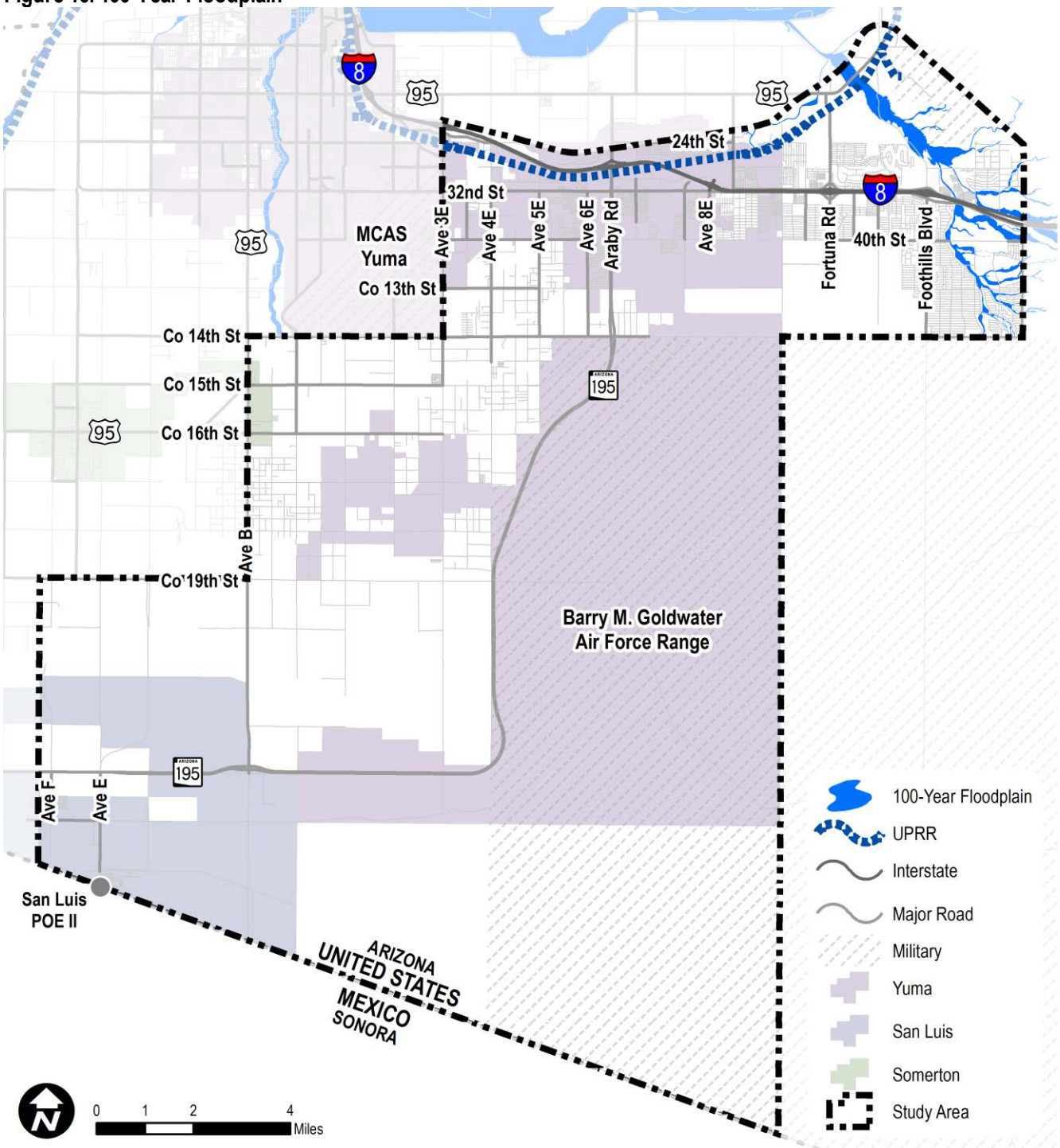

Sole Source Aquifer

The project is not located within the limits of a Sole Source Aquifer[4]. Therefore, no impacts are anticipated. This should be reevaluated during the environmental clearance process.

Cultural Resources

Based on preliminary review, there are 84 cultural sites that extend into the study area, 14 of which are determined eligible for inclusion in the National Register of Historic Places (NRHP) and would require mitigation. 48 of the sites are either unevaluated, recommended not eligible, or recommended eligible and would require more research. Potential impacts to cultural resources should be evaluated during the environmental clearance process.

Section 4(f) Resources

The project is subject to Section 4(f) of the United States Department of Transportation (USDOT) Act of 1966 (49 U.S.C. 303). Based on preliminary review, public parks are located within the study area, including Terraces Park and Saguaro Park. Potential impacts to these Section 4(f) resources should be evaluated during the environmental clearance process.

Section 6(f) Resources

Section 6(f) of the Land and Water Conservation Fund (LWCF) Act of 1965 (16 U.S.C. 4601-4 et seq.) applies to all transportation projects, regardless of funding source or approval authority, which propose to use land from a Section 6(f) property. Based on preliminary review, there are no potential protected Section 6(f) properties in the study area[5]; therefore, Section 6(f) analysis/consultation is not required. This conclusion should be reevaluated during the environmental clearance process.

Visual

The overall visual character of the study area varies. The southern portion is dominated by native desert, the eastern portion consists of military land use, the western portion is largely rural residential development and agricultural land use, and the northern portion consists of residential and commercial development. Land ownership within the study area includes Bureau of Land Management (BLM), Bureau of Reclamation (BOR), Cocopah Indian Reservation, military (Goldwater AFR and MCAS Yuma), Arizona State Land Department (ASLD), and privately owned lands. BLM Visual Resource Management (VRM) areas of Class III and IV are within the study area. Land ownership is shown in **Figure 17**. Potential visual resource impacts should be analyzed during the environmental clearance process.

[4] Environmental Protection Agency (EPA). 2022. Sole Source Aquifers. Accessed January 4, 2022. https://epa.maps.arcgis.com/apps/webappviewer/index.html?id=9ebb047ba3ec41ada1877155fe31356b

[5] The Land and Water Conservation Fund (LWCF). 2022. Pas Projects. Accessed January 4, 2022. https://lwcf.tplgis.org/mappast/

Figure 17. Land Ownership

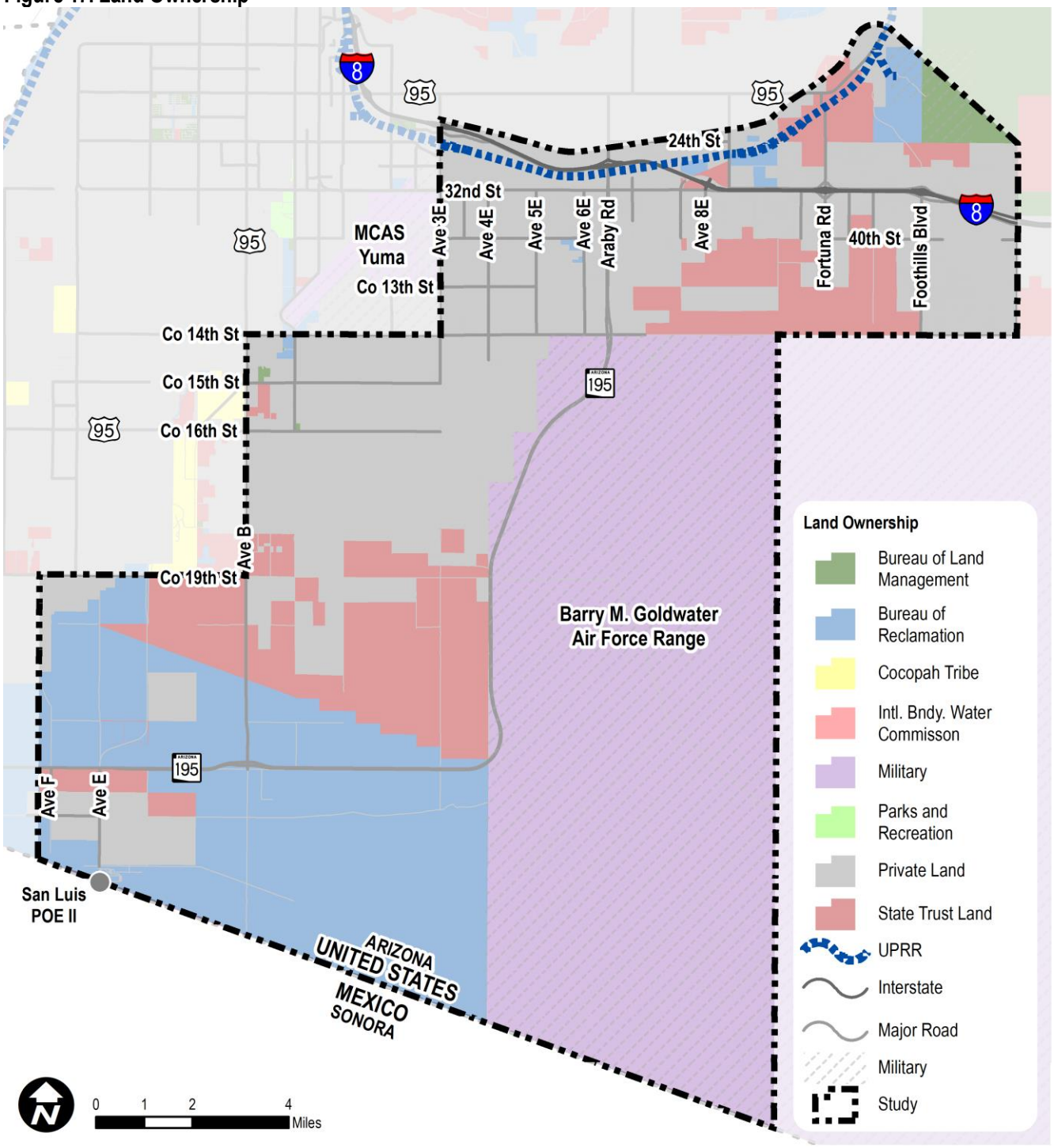

Scenic and Historic Routes

There are no scenic routes within the project area. US 95 is a historic route located near the study area[6]. Potential impacts should be evaluated during the environmental clearance process.

[6] Arizona Department of Transportation (ADOT). 2022. Historic and Scenic Roads. Accessed January 4, 2022. https://azdot.gov/about/historic-and-scenic-roads

Socioeconomic Impacts

Socioeconomic analysis is an examination of how a proposed project will impact the overall social and economic character of an area and the well-being of current and future residents of the affected community. Community demographics, safety, public services, employment and income levels, housing , and visual quality are socioeconomic parameters that should be analyzed during the environmental clearance process.

Title VI/Environmental Justice Populations

Title VI/Environmental Justice (EJ) evaluations are part of the larger socioeconomic analysis discussed above. Demographics to be analyzed during the environmental clearance process include racial and ethnic minorities, age, gender, elderly, female head of household, low-income and disabled populations. These Title VI/EJ populations should be analyzed further during the environmental clearance process.

Hazardous Materials

Based on a review of the Arizona Department of Environmental Quality (ADEQ) eMaps[7], there is one service station with an open leaking underground storage tank (LUST) case on the northeast corner of 32nd Street and Araby Road. This case involves soil contamination.

A Superfund site is located adjacent to the study area to the west. The site includes groundwater and soil contamination. A Preliminary Initial Site Assessment (PISA) should be prepared during the environmental clearance process to further investigate the potential for facilities with hazardous materials concerns.

Noise

Noise-sensitive receptors are located within the study area. Alternatives that may impact sensitive noise receptors would likely require noise analysis. Potential noise impacts should be evaluated during the environmental clearance process.

AZPDES Stormwater Permit

The project may disturb more than one acre of land; if that is the case, a Section 402 [Arizona Pollutant Discharge Elimination System (AZPDES)] permit and a Stormwater Prevention Pollution Plan (SWPPP) would be required from the ADEQ. The need for these permits should be evaluated during the environmental clearance process.

Air Quality

The project is partially located in a nonattainment area for ozone (O3) and most of the project is within a nonattainment area for particulate matter (PM) 10[8]. The project is not located within nonattainment or maintenance areas for carbon monoxide (CO); lead (Pb); nitrogen dioxide (NO2); PM2.5; or sulfur dioxide (SO2). Air quality impacts should be evaluated further during the environmental clearance process.

Public/Agency Scoping

Public/agency scoping should be completed during the environmental clearance process in the form of scoping letters and be documented.

[7] Arizona Department of Environmental Quality (ADEQ). 2022. eMaps. Accessed January 4, 2022. https://www.azdeq.gov/emaps
8 ADEQ. 2022. eMaps. Accessed January 4, 2022. https://www.azdeq.gov/emaps

SR 195 Environmental Documentation/Agreements

Flat-Tailed Horned Lizard

Notable on the Arizona Special Status Species list is a species called the flat-tailed horned lizard (FTHL) because it has an established multi-agency conservation agreement. The California Department of Fish and Wildlife website explains the origin of this agreement:

The Flat-tailed Horned Lizard (Phrynosoma mcallii) has the most limited distribution of any horned lizard species in the U.S. It is found in the Colorado Desert in California, Arizona, and Mexico… Numerous failed attempts to list the species at both the Federal and State level led to the development of a Conservation Agreement in 1997 among state and federal parties that oversee Flat-tailed Horned Lizard (FTHL) habitat. CDFW joined the California Department of Parks and Recreation, Arizona Department of Game and Fish, and several Department of Defense and Interior agencies as signatory parties to the Agreement. (CDFW, 2021)

The parties to the Conservation Agreement established a Working Group which subsequently developed a document called the Flat-tailed Horned Lizard Range-wide Management Strategy (RMS). This RMS document includes extensive discussion of the Goldwater AFR. Some key information from the RMS follows:

The passage of the Military Lands Withdrawal Act of 1986 (Public law 99-606) transferred land management responsibilities on the Goldwater AFR to the BLM. The BLM administers public lands within FTHL habitat under both the "Yuma District Resource Management Plan" (BLM 1987a) and the "Lower Gila South Resource Management Plan (Goldwater Amendment)" (BLM 1990), which includes the Goldwater AFR. Formerly part of the Lower Gila South Resource Area, this portion of the Goldwater AFR is now administered by the BLM's Yuma Field Office.

Under the heading of "Threats", the RMS document states:

"Yuma County has proposed to construct the Area Service Highway linking the Araby Road Exit on Interstate 8 and San Luis, Arizona. The proposed route would pass through approximately 10 miles of previously undisturbed flat-tailed horned lizard habitat and would upgrade and pave approximately 5 miles of an existing dirt road."

This "Area Service Highway" did get built (now SR 195), following an ADOT Environmental Assessment (EA) which discussed the FTHL situation in detail, with specific mitigation commitments (ADOT, 2005). A key mitigation commitment was compensation for all FTHL habitat lost due to direct construction (623 acres), as well as habitat isolated (an additional 3,654 acres) and thus rendered unusable due to landscape fragmentation. ADOT agreed to have the impacted lands appraised and to pay the monetary equivalent to BLM which in turn would identify and prioritize acquisition of other suitable habitat nearby. This compensation was to occur at a ratio of one acre compensated for each one acre of habitat lost.

The FTHL is likely to be encountered by any corridor alternatives in the eastern portion of the study area and will likely require similar mitigation measures as those in the SR 195 EA. In particular, if a recommended alternative impacts land under BLM control, mitigation measures for the FTHL will be required.

Other Species Addressed in the SR 195 EA

FTHL was the species receiving most of the attention in ADOT's 2005 EA for SR 195, but several other species were also assessed:

- Sonoran pronghorn
- Peirson's milk-vetch
- Mountain Plover
- Cowles fringe-toed lizard

- Sand food (Pholisma sonorae)

The SR 195 EA had the following conclusions with regard to these species (excluding FTHL):

"The project may affect, but is not likely to adversely affect the Sonoran pronghorn or its habitat. In a Biological Opinion issued under formal Section 7 consultation, FWS determined that the proposed project is not likely to jeopardize the continued existence of Peirson's milk-vetch. A conference opinion issued by FWS for the mountain plover determined that the ASH is not likely to jeopardize the continued existence of the species. There would be no effect on any other FWS threatened, endangered, proposed, or candidate species potentially occurring in Yuma County because suitable habitat for these species does not exist within the project area. Impacts to the FTHL would be addressed through mitigation measures that are consistent with the 2003 FTHL RMS and Agreement. No substantive impacts have been identified for the Cowles fringe-toed lizard or sand food that are not to some extent, moderated by the implementation actions for the FTHL."

A more recent report, the 2018 Goldwater AFR Integrated Natural Resources Management Plan Update, states that:

"Currently, Peirson's milkvetch is not known to exist in Arizona, although it occurs nearby in Sonora and suitable habitat exists in the Yuma Dunes at BMGR West."

It may be appropriate to include consideration of these species identified by the SR 195 EA in the eventual biological field assessment for the recommended corridor recommended.

Opportunities and Constraints

Opportunities

- Other than the Flat-tailed Horned Lizard, there are not anticipated to be major impacts to threatened or endangered species in the study area.
- Floodplains are only present in the far northeast corner of the study area.
- There are few Section 4(f) and no Section 6(f) resources in the study area.
- There is only one known source of hazardous material contamination in the study area.
- The study is in an air quality non-attainment area, which may be a benefit to constructing infrastructure that reduces overall freight emissions, such as converting truck trips to rail.

Constraints

- The Flat-tailed Horned Lizard presents a major obstacle to constructing a rail alignment to the east or south of the SR 195 corridor, particularly within the Goldwater AFR.
- There are several environmental factors that will need to be evaluated in future phases of study, such as wetlands, cultural resources, and socioeconomic impacts. Mitigation strategies may need to be developed for these, depending on the selected alignment alternative.

8. Rail Alignment Opportunities and Constraints

Within each of the preceding sections, opportunities and constraints have been listed. Most of these opportunities and constraints geographically impact the feasibility of rail alignment alternatives. These geographic opportunities and constraints have been mapped in **Figure 18** to highlight where potential alternatives should be developed and where there are major locations to avoid with potential rail alignment alternatives.

One of the major factors in the viability of rail alternatives is future land use. Future land uses have been categorized to show whether land uses are generally supportive or not supportive of rail implementation. **Table 5** shows how land uses were categorized.

Table 5. Future Land Use Opportunities and Constraints

Land Use	Opportunity	Constraint
Low-Density Residential		X
Medium-Density Residential		X
High-Density Residential		X
Commercial	X	
Employment	X	
Mixed-Use	X	
Public		X
Industrial	X	
Agricultural		X
Open Space/Recreation		X

Figure 18. Rail Alignment Opportunities and Constraints

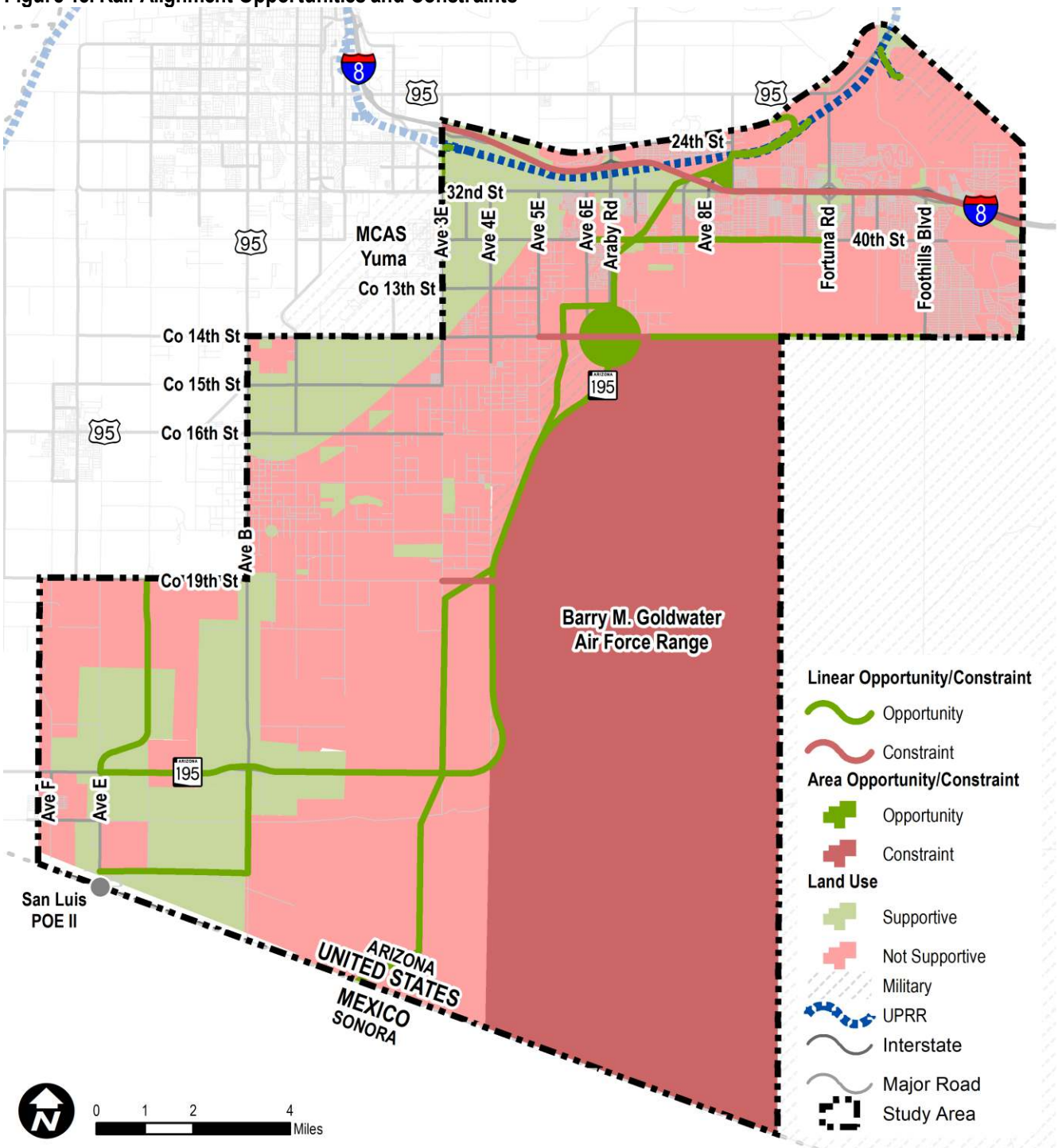

9. Rail Infrastructure Planning Scenario

Based on the most recent track engineering standards from UPRR (September 21, 2020), the following design parameters are determined to be most appropriate for a new north-south rail facility:

- Geometry (horizontal alignment only)
  - 40 mph track design speed (Class 3 track); typical for regional track
  - 1" unbalance on curves
  - Maximum horizontal curve of 5˚ (chord definition)
  - Number 20 Common Standard Turnout – along the mainline
  - Number 11 Common Standard Turnout – for access to industry
- Roadbed and Rail Section
  - 136 lb RE Rail, welded
  - Wooden ties (steel ties could also be considered in future design processes)
- Right-of-way
  - 100' typical right-of-way for mainline segments (a typical cross-section is shown in **Figure 19**).

Figure 19. Typical Mainline Cross-Section

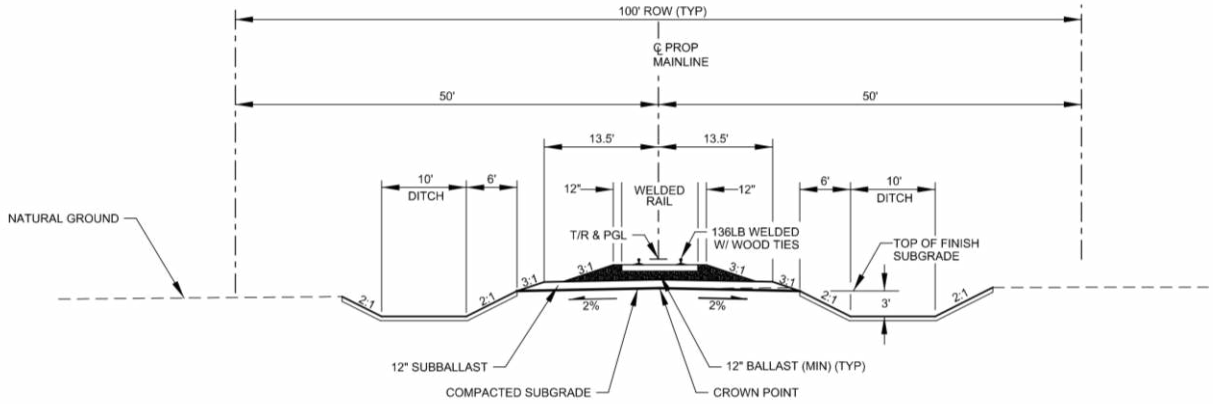

  - Varying right-of-way of between 100' and 500' for segments with sidings depending on access requirements and terrain (a typical cross section is shown in **Figure 20**).

Figure 20. Typical Mainline with Siding Cross-Section

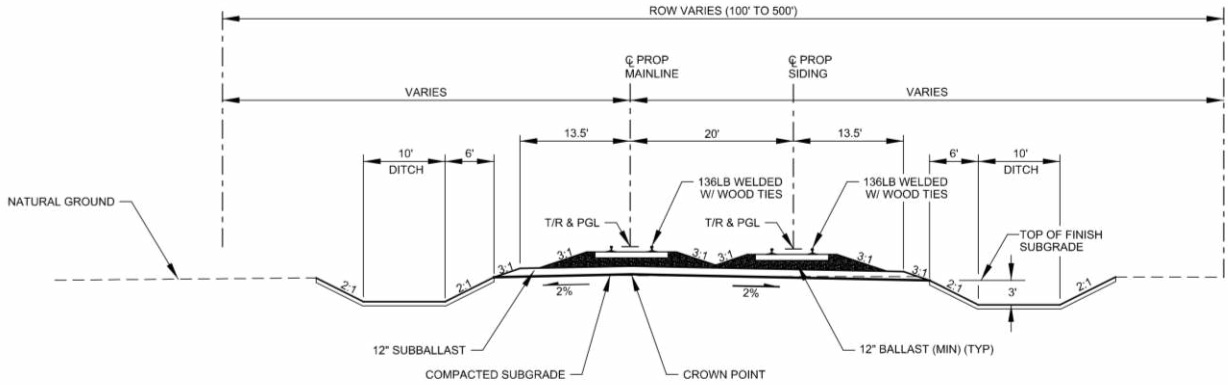

Applicable UPRR Engineering Standards are provided in **Appendix B** to illustrate anticipated design elements to be included in a future north-south rail alignment:

- 0001 Roadbed Sections for Wooden Tie Track
- 0003 Roadbed Sections for Industry
- 0017 Facing Point Turnout Arrangement
- 0018 Minimum Tangent Distance
- 0019 Superelevation of Curves General
- 0020 Superelevation of Curves Equilibrium
- 0021 Superelevation of Curves 1" unbalance
- 0022 Superelevation of Curves 2" unbalance
- 0023 Superelevation of Curves FRA max
- 0038 Standard Minimum Operating Clearances
- 0050 Design Data for Turnouts
- 0075 Standard ROW Fencing
- 0076 High Security Gate at-grade crossing
- 0077 High Security Fencing
- 0080 Standard Turnout Application

Border-Related Infrastructure Requirements

In addition to the typical infrastructure and right-of-way requirements for the railroad mainline, additional infrastructure and land will be required for a border-related inspection facility. Rail cars from Mexico are required to be inspected within 35 miles of the US/Mexico border; however, most rail inspection and intermodal facilities are located within 10 miles of the border.

The specific size needed for this international inspection and intermodal facility is dependent on the number of rail cars, trucks, and lifts. Generally, these facilities tend to be approximately 230 acres in size – approximately 10,000 feet long by 1,000 feet wide running parallel to the mainline track.

Appendix A. Stakeholder Engagement Summaries

Yuma County Interview

The following key stakeholders were engaged to discuss opportunities and constraints within the project study area in relation to Yuma County, as shown in **Table 6**.

Table 6. Yuma County Stakeholders

Stakeholder	Position
Francisco Sanchez	*Yuma County, Public Works*
Alejandro Figueroa	*Yuma County, Economic Development*
Craig Sellers	*Yuma County, Development Services*

Key takeaways and considerations resulting from discussion with Yuma County Stakeholders include:

- Extension of the Avenue D/E corridor is planned to connect with County 18th St. Yuma County has acquired environmental clearance and has begun right-of-way acquisition but does not have funds established yet. This extension may provide an opportunity for co-locating with rail.
- Land north of San Luis POE II is anticipated for housing development, which would be incompatible with freight rail.
- The Prison is located at Avenue B and SR 195, with development planned of the surrounding land expected in the future.
- Right-of-way acquired for SR-195 was not fully used for the roadway alignment. There may be enough existing right-of-way to have the rail alignment follow the corridor.
- Yuma County suggested that the project team investigate BLM and State Trust Lands as possible alignment locations.

ADOT Interviews

Four interviews were held with ADOT staff from a variety of divisions within the agency. Stakeholders interviewed are listed in **Table 7**.

Table 7. ADOT Stakeholders

Stakeholder	Position	Interview Date
Charla Glendening	*Multimodal Planning Division*	December 3, 2021
Jason James	*Multimodal Planning Division*	December 3, 2021
Heidi Yaqub	*Multimodal Planning Division*	December 3, 2021
Sayeed Hani	*Railroad Liaison*	December 13, 2021
Paul Patane	*Southwest District Engineer*	December 13, 2021
Mark Hoffman	*Multimodal Planning Division*	December 14, 2021

Discussion of opportunities and constraints from included:

- Concerns and Challenges
  - The main challenge will be connecting the 20 miles of rail from the UPRR Sunset Route to existing and future commercial/manufacturing facilities/sites in Mexico.
    - Residential and commercial development along the I-8 corridor (both incorporated and unincorporated areas) will limit rail alignment opportunities crossing I-8.

        - Current military installations (MCAS Yuma and Goldwater AFR land areas/holdings) south of I-8, extending to the Mexico border will limit available land for the rail alignment.
        - Pressure to amend the City of San Luis General Plan to accommodate residential development to the east of the San Luis II Land Port of Entry (LPOE) will limit available undeveloped land within San Luis.
    - Topics surrounding San Luis II POE freight trucking
        - Currently, the freight trucking volume/activity at the POE is not close to capacity, and that there is no immediate need, nor outlook, that would suggest that any infrastructure would need to be modified to accommodate anticipated increases in volume related to freight traffic crossing the border.
        - Certain areas within the study area have significant truck volume related bottleneck issues. According to the ADOT Inventory of State Freight Transportation System Assets draft working paper, many of the arterial roadways and highways from the POE traveling through San Luis to the I-8 are all considered "Poor" according to the Truck Travel Time Reliability (TTTR) measure. Specifically, SR 195 and US 95 in the Yuma region are two state highway segments that have poor TTTR.
    - Location of a potential intermodal facility within the study area.
        - It would likely take between 50 to 100 acres to adequately house an intermodal facility.
        - One potential site discussed that could accommodate the intermodal facility is located north of the I-8 and west of Avenue 9E. This site was noted as being currently vacant, near I-8, and large enough to theoretically house and operate a future intermodal facility.
- Alignment Options and Opportunities
    - The primary rail/heavy freight option depicted/discussed during the stakeholder interviews followed the existing State Route 195 (SR 195) alignment. There were concerns introduced regarding the amount of current right-of-way (ROW) available within the SR 195 easement to include a new rail facility. However, it was noted that the easement was originally established for highway purposes, and some additional space may be available for other purposes.
    - Due to the potential constraints to the east side of the study area, there were several conversations during the interview process that posed consideration for using the existing UPRR rail line/bed to the north and west of Yuma along the southern and eastern bank of the Colorado River and the Main Outlet Drain facility. The alluring aspect of reusing this abandoned UPRR line is due to the existing infrastructure and related ROW which could result in less of an environmental impact since there was already ground disturbance. This is important because any future project with ground disturbance could be halted because of the potential impact to an endangered species that could be threatened within the study area. However, using the abandoned UPRR line/bed was later discounted, during our stakeholder discussion, because previous studies uncovered that the existing rail line could only accommodate freight traveling at speeds under 30 miles per hour. It was also shared that the old UPRR rail line/bed was located near a levee which could make future rail construction difficult and costly.

City of Yuma Interview

The following stakeholders were involved in discussions with City of Yuma staff on opportunities and constraints within the City of the rail alignment, as shown in **Table 8**.

Table 8. City of Yuma Stakeholders

Stakeholder	Position
Jeffery Burt	*City of Yuma, Economic Development Administrator*
Jeremy McCall	*City of Yuma, Utilities Department Director*
Timothy Bourcier	*City of Yuma, Director of Planning and Neighborhood Services*

Discussion with the City of Yuma resulted in the following key takeaways and considerations:

- The future Hotel Del Sol Project to be built near downtown should be accounted for when assessing alignment opportunities crossing through the City of Yuma.
- The General Plan Update for the City of Yuma is proposing future growth areas and areas of development.
    - The State Trust Land surrounding Fortuna Road is identified as a growth area for the City and is planned for development in the future.
    - To the northeast and west of the UPRR tracks, the undeveloped land is anticipated to be agricultural and industrial land uses.
    - The undeveloped land along Fortuna Road and the Frontage Road, southeast of the UPRR tracks, is anticipated to be open space and commercial development in the future.
- A possible alignment opportunity may follow the alignment of SR-195.
    - Alignment along the Gila Canal may be a possible opportunity to the north, as it connects with both UPRR and SR 195.
- Extension of 40th Street from Mississippi Road to Araby Road, with the addition of a bridge crossing the canal, is planned. This extension is anticipated to be constructed in 2022. After construction is complete, residential development is anticipated for the surrounding area.
- The land near the intersection of Arby Road and SR 195 is being considered for industrial development due to its proximity to SR 195.
- Land near the intersection of Arby Road and 14th Street is planned for development, recognizing the buffer will be present due to proximity to the bombing range.
- Enstansia is an area of undeveloped land between County 16th Street and County 19th Street. The area was aspired to be residential development although development is unlikely due to lack of infrastructure investment in the area.
- A space port is planned south of SR 195 near Avenue B. A feasibility study is currently being conducted to determine if the location is appropriate. If developed, the surrounding area will need to be used as a buffer area for the port.
- APS has investigated the study area as a location for building an electric distribution system. If this is feasible, there may be an opportunity to have the rail alignment follow an APS utility corridor.

City of San Luis Interview

The following key stakeholders were engaged to discuss opportunities and constraints within the project Study area in relation to the City of San Luis, as shown in **Table 9.**

Table 9. City of San Luis Stakeholders

Stakeholder	Position
Eulogio Vera	*City of San Luis, Public Works*
Jenny Torres	*City of San Luis, Economic Development*

Discussion of opportunities and constraints within the City of San Luis resulted in key takeaways shown below:

- Existing vacant land between Avenue E and Avenue D has been amended to be designated as residential land use. More specifically, Avenue E is anticipated to have residential development on either side of the corridor in the future.
- Land north of County 24th St, adjacent to Avenue E is planned to be developed as single-family residential in the future.
- The extension of Avenue E is being conducted by Yuma County. It is anticipated to connect further east of 10th Avenue.
- Implementation of gas and rail can attract industrial developers to the area. Because San Luis is one of the only ports without rail connection, the City feels that opportunities are being missed. The City greatly supports this effort to increase the industrial economy.
- The Bureau of Reclamation recently implemented electric power lines along Avenue D, spanning from County 25th Street to 18th Street, near the canal. Right-of-way was purchased to implement it.

Arizona Public Service Interview

The stakeholders in **Table 10** were engaged to discuss opportunities and constraints within the project Study area in relation to APS.

Table 10. City of San Luis Stakeholders

Stakeholder	Position
Charles Molina	*Supervisor for Construction/Maintenance and Operations, APS*
Danny Ortega	*Division Manager for La Paz and Yuma Counties, APS*
Russel Quinn	*Right-of-Way Representative for the Yuma Area, APS*

Discussion of opportunities and constraints within the City of San Luis resulted in key takeaways shown below:

- APS is currently constructing a 230KV line that will cross over Araby Road and will provide redundant service to the west side of Yuma.
- There is a Western Area Power Administration (WAPA) line that currently runs west of Yuma, south to the border of Mexico.
- TransCanyon is a separate entity that is proposing to build a 230KV line from Mexico to the North Gila APS substation, located north of I-8 on Avenue 7E.
- An APS substation is located within the study area west of Avenue E and SR 195. All other substations are further north and not a concern for this study.
- Several solar companies are interested in the undeveloped land within the study area along the eastern boundary, but no concrete plans are in place for any future development.

San Luis Rio Colorado and Sonora, Mexico Interview

Involved stakeholders in the stakeholder interview involving San Luis Rio Colorado and the state of Sonora included the following (shown in **Table 11**):

Table 11. San Luis Rio Colorado and Sonora, Mexico Stakeholders

Stakeholder	Position
Felipe Sesma	*Ministry of Economy, General Director of Municipality Liaison*
Cynthia Lopez	*Ministry of Economy, New Investments and Projects*
Mario Guevera	*San Luis Rio Colorado, Director of the Economic Development Promotion Agency*

An interview with stakeholders from both the City of San Luis Rio Colorado and the State of Sonora was significant in understanding the existing opportunities in constraints within San Luis Rio Colorado and the greater region. The discussion also improved understanding of the State of Sonora's goals for freight and rail.

Discussion with stakeholders from Sonora, Mexico resulted in the following key takeaways and considerations:

- It was suggested that the "Parque Industrial Internacional" be included in the meetings to learn about the development plan.
    - Mario Guevara to provide contact information
    - To share Municipal Urban Development Plan of San Luis Rio Colorado
    - Location proposal for the new railroad crossing because of the study of the railway spur project at the "Doctor" station
- The Sonora State Economic Development Plan would be a beneficial resource to review
- The origin of the project's benefits for the region should be expanded upon.

Economic Development Interview

Involved stakeholders in the discussion of economic development and the rail alignment corridor study is shown below in **Table 12.**

Table 12. Economic Development Stakeholders

Stakeholder	Position
Julie Engel	*Greater Yuma Economic Development Corporation*
Kimberly Kahl	*Yuma County Chamber of Commerce*
Nazzer O. Mendez Robles	*4FrontED*
Buna George	*ADOT*

The discussion with stakeholders regarding opportunities and constraints within the study area in relation to economic development resulted in the following key takeaways:

- Need for a freight rail alignment through the greater Yuma Area to Sonora, Mexico was expressed. Local need is present in both Yuma and San Luis Rio Colorado to justify implementation of a rail alignment.
- The addition of a rail line through this area would provide more business opportunities to the greater Yuma region and provide a competitive advantage to San Luis || Port of Entry over other ports because the area has space for additional development.
- The addition of a rail alignment would provide opportunities for freight to avoid crossing through California and will allow for freight to travel from Ensenada to Yuma directly. This is also beneficial because San Luis and Yuma have weight allowances for overweight trucks entering the United States, whereas California does not.
- The out of service railroad to the west of UPRR may be a beneficial alignment option to avoid conflict with the Goldwater AFR.

Other Stakeholders in Mexico

The following additional stakeholders were involved in the discussion of opportunities and constraints of the rail alignment corridor study in relation to Mexico. Involved stakeholders are shown in

Table 13.

Table 13. Economic Development Stakeholders

Stakeholder	Position
Ubaldo De Azpaizu	*San Luis Rio Colorado*
Juan Carlos Miranda Hernandez	*JCM Ingenieria y Consultoria SA de CV*
Manuel de Jesus Baldenebro Arredondo	*SLRC Mayor*
Mario Guevara	*Organismo Promotor de Desarrallo Economico, SLRC*
Felipe Sesma	*Sonora State Municipality Liaison*

The discussion with stakeholders regarding opportunities and constraints within Mexico resulted in the following key takeaways:

- The State of Sonora is interested in promoting economic development in the northern part of the state and supports implementation of a rail line, as it would provide benefits to San Luis Rio Colorado.
- A new rail crossing connecting San Luis Rio Colorado and Yuma is not currently within the interest of the federal government.
- Ferromex did not express interest in a rail connection investment in San Luis Rio Colorado if there is not additional demand generated for a new crossing.
- If there is a freight shift from the rail crossing at Mexicali and Calexico to the new San Luis Rio Colorado and Yuma rail crossing in the future, there is no interest for Ferromex or Guaymas Seaport to make any investments in the crossing.
- San Luis Rio Colorado supports any infrastructure project that can benefit the city.
- The city is aware of previous efforts to implement a new rail connection to link a Mexican seaport at the pacific coast to the Mexico-US border, including Punta Colonet and El Sauzal seaport projects, and is in support of further work to benefit the implementation of a rail alignment.
- The City of San Luis Rio Colorado is very interested in establishing continuous contact with the City of Yuma in relation to bi-national railway efforts.
- Shared information regarding the Parque Industrial International master plan, where layouts proposed a rail crossing location.

MCAS Yuma Interview

The following stakeholders were involved in the discussion of opportunities and constraints of the rail alignment corridor study in relation to the Goldwater AFR. Involved stakeholders are shown in **Table 14**

Table 13.

Table 14. MCAS Yuma Stakeholders

Stakeholder	Position
Ron Kruse	*Public Works Director*
Mary Ellen Finch	*Community Liaison Officer*
Jeremy Pennell	*Wildlife Biologist*
Bill Sellars	*Range Management Director*
John Gordon	*Range Training Officer*
Randy English	*Conservation Manager*

The discussion with stakeholders regarding opportunities and constraints within Mexico resulted in the following key conclusions:

- Due to the presence of the Flat-tailed Horned Lizard habitat, any impact to this habitat requires a 6:1 ratio of compensation. In 2013 this was a constraint. Today this constraint is greater due to other disturbances that has taken place. This habitat is particularly a concern east of SR 195 and near the west turn of SR-195. Locating rail on Goldwater AFR will likely impact training infrastructure that will require to move the infrastructure elsewhere on the Goldwater AFR which in turn will impact the environmentally sensitive habitat. MCAS Yuma will require the financier/operator of the rail to be solely responsible for all compensation requirements to mitigate all impact to land or operations. In general, compensation lands would have to be purchased in Arizona or California. The land is valued at approximately $12,000-$15,000/acre as of 1Q 2022. This financial burden falls solely on the proponent of the rail, not the Department of Defense. Impact to habit also has a tertiary impact even if compensated for it. MCAS/Goldwater AFR will lose credits for habitat which is currently preserved on Goldwater AFR. Lastly, the habitat areas can't be "chopped up" which could mean remediation/compensation lands will need to be greater than the footprint area of the rail.
- A renewable energy facility is planned west of County 19th Street and County 14th Street to reach photovoltaic goals. The Navy will seek compensation for any loss of capital associated with a rail corridor near this facility.
- Munition Response Program (MRP): Construction on the range is required to go through the MRP which requires extensive survey of munition residue and remediation.
- Archeologic/cultural and biological regulatory compliance is required for any proposed disturbance or improvements.
- Two WWII training ranges are located within the proposed corridor. which cannot be impacted per SHPO. The WWII (oval) training areas may be processed if required and remediated through proper MRP and regulatory compliance processes.
- The study area is within the F-35 flight pattern training area and a F-35 field carrier landing practice (FCLP) facility is located 6-8 miles east of the entrance to the range on County 19th Street. Any operations and lighting associated with the rail corridor is detrimental to the required "sterile" training environment and would have to be substantially mitigated.
- The SR 195 easement prohibits utilities and rail within the easement. This was specifically included by MCAS when the easement was granted.
- A grade separated crossing would be necessary for County 14th Street to prevent rail from disrupting training and operations. There are well over 1,000-2,000 military vehicle movements per day on County 14th Street. This is related to military working on the cannon Air Defense Complex (CADC) and commute to/from the Main Station. This does not include other public/commercial traffic accessing SR-195 from County 14th Street west of CADC. Additionally, there has been a ramp-up of Aux 2

activity since some operations moved out of YPG. CNAS footprint is bigger than the Aux 2 on County 19th Street. Another grade separated crossing may be needed here.

- There is concern that the rail line will create impacts to Border Patrol operations and invite vandalism to rail cars and trespassing which would create a nuisance for law enforcement in the range and Anti-Terrorism Force Protection (ATFP) security concerns

Luke Air Force Base

Representatives from the Luke Air Force Base were interviewed to inquire about the opportunities and constraints in relation to locating an international heavy rail corridor in or near the Goldwater AFR. Representatives of the Air Force Base interviewed shared that they have no comment regarding the heavy rail line since their portion of range management exists east of the study area.

Appendix B. Applicable UPRR Engineering Standards

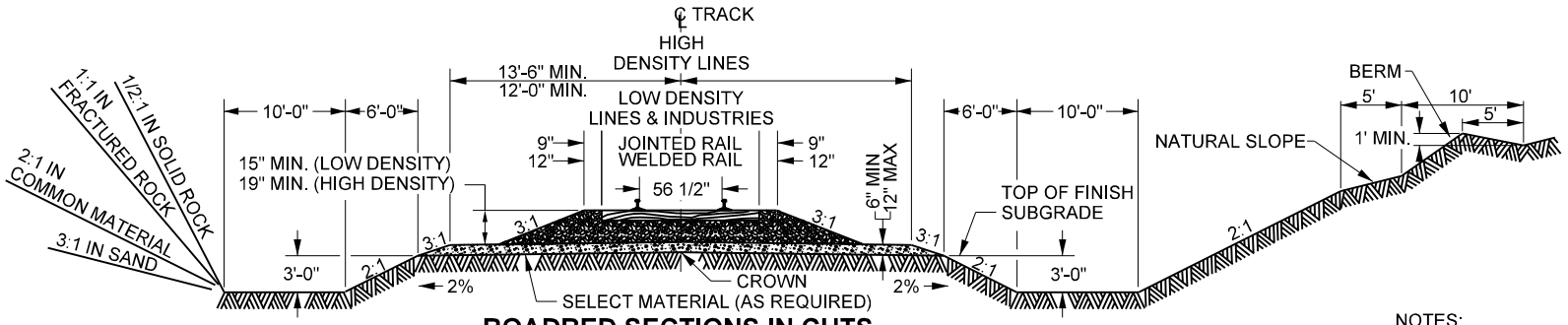

ROADBED SECTIONS IN CUTS

NOTE: HYDROLOGY STUDY SHALL BE USED TO SET THE LIMITS AND DEPTH OF INTERCEPTING DITCHES. BERM FOR INTERCEPTING DITCHES TO BE CONSTRUCTED WITH MATERIAL REMOVED FROM THE ROADBED SIDE. DO NOT EXCAVATE BACK OF BERM. HEIGHT OF BERM TO BE A MINIMUM OF 1'-0".

MATERIAL REQUIRED FOR 1000 FEET OF SINGLE TRACK				
BALLAST			SUBBALLAST	
DEPTH	SHOULDER	CUBIC YARDS	DEPTH ABOVE TOP SUBGRADE	CUBIC YARDS
15"	9"	625	6"	700
	12"	650		
19"	9"	925	12"	1385
	12"	960		

ABOVE QUANTITIES ARE FOR TANGENT TRACK AND INCLUDE 15% ALLOWANCE FOR SHRINKAGE.

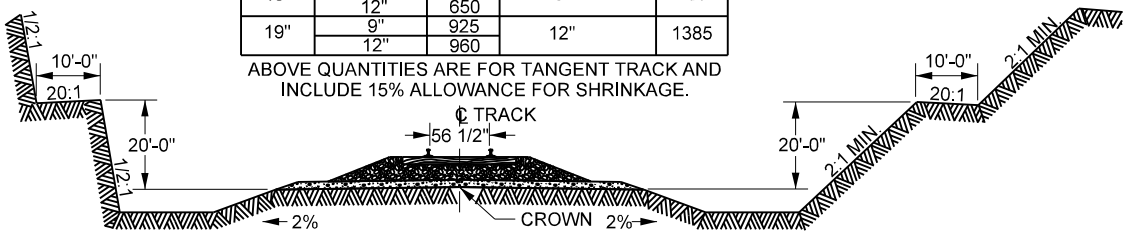

HALF SECTION IN SOLID ROCK

DEEP CUT SECTIONS

HALF SECTION IN EARTH OR LOOSE ROCK SEE NOTE 2

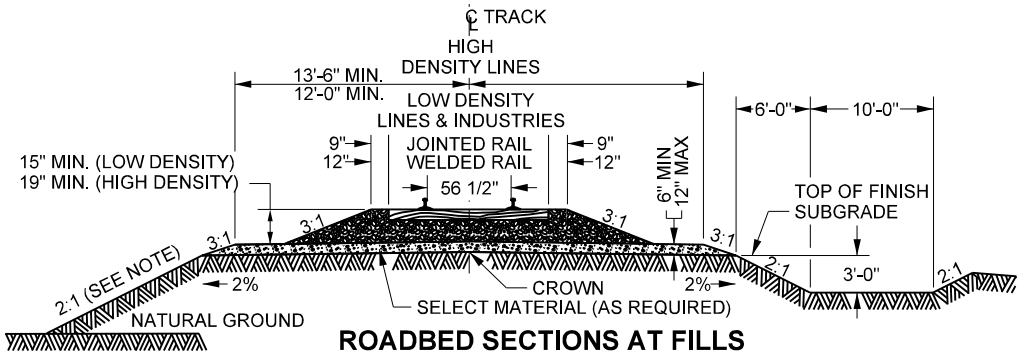

ROADBED SECTIONS AT FILLS

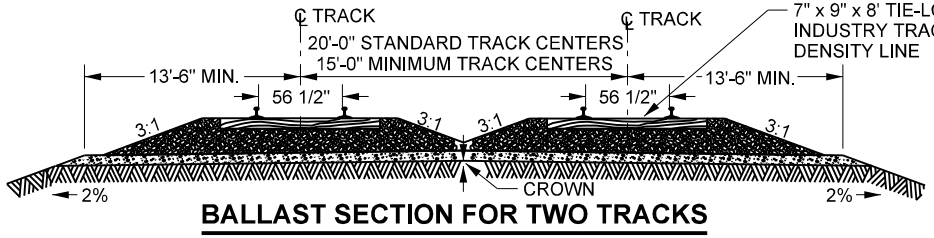

BALLAST SECTION FOR TWO TRACKS

NOTES:

1. THE DEPTH OF BALLAST AND DEPTH OF SELECTED MATERIAL SHALL BE DECIDED ON THE BASIS OF VOLUME OF TRAFFIC AND THE QUALITY OF SELECTED MATERIAL AND SUBGRADE DETERMINED BY THE RAILROAD'S ENGINEER SUBJECT TO THE APPROVAL OF THE AVP.
2. SLOPES SHOWN FOR BANKS IN CUTS AND ON FILLS SHALL BE CONSIDERED STANDARD AND GENERALLY USED, BUT MAY BE MODIFIED AS REQUIRED BY LOCAL CONDITIONS AND CHARACTER OF MATERIAL.
3. BALLAST MUST BE EQUALIZED IN ADVANCE OF DRESSING SO THAT FINAL SECTION WILL CONFORM TO SLOPE REQUIREMENTS AND CHARACTER OF MATERIAL.
4. WHERE OFF-TRACK ROADWAY IS TO BE PROVIDED, ADD 10'-0" ADDITIONAL WIDTH TO THE ROADBED SECTION AT TOP OF SELECTED MATERIAL ELEVATION.
5. ALL FILL SLOPES, BERMS AND OTHER DISTURBED AREAS SHALL BE FACED WITH COVER OF MATERIAL SUITABLE FOR GROWING GRASS AND HAVING A THICKNESS OF APPROXIMATELY 6 INCHES. THE OUTER SURFACE OF THIS COVER SHALL COINCIDE WITH THE DESIGN SLOPE OF THE EMBANKMENT. MATERIAL FOR THIS COVER MAY BE OBTAINED FROM STRIPPING. SEEDING SHALL CONFORM TO THE DEPARTMENT OF TRANSPORTATION SPECIFICATION FOR THAT STATE AND REGION.
6. FLOW LINE ON 0.2% MINIMUM GRADE DITCHES AND BENCHES.
7. FLAT BOTTOM DITCHES ARE REQUIRED FOR HIGH DENSITY LINES, HOWEVER A "V" DITCH IS ACCEPTABLE FOR INDUSTRY TRACKS WHEN RIGHT-OF-WAY IS LIMITED AND WHERE LOCAL CONDITIONS AND CHARACTER OF MATERIAL SO REQUIRE.

UNION PACIFIC RAILROAD ENGINEERING STANDARDS

ROADBED SECTION FOR WOOD TIE TRACK CONSTRUCTION

ADOPTED: SEP. 21, 2020
REVISED:
FILE NO.: 0001

STD DWG
0001
PAGE 1 OF 2

STD DWG
0001
PAGE 1 OF 2

Copyright © 2020 by Union Pacific Railroad

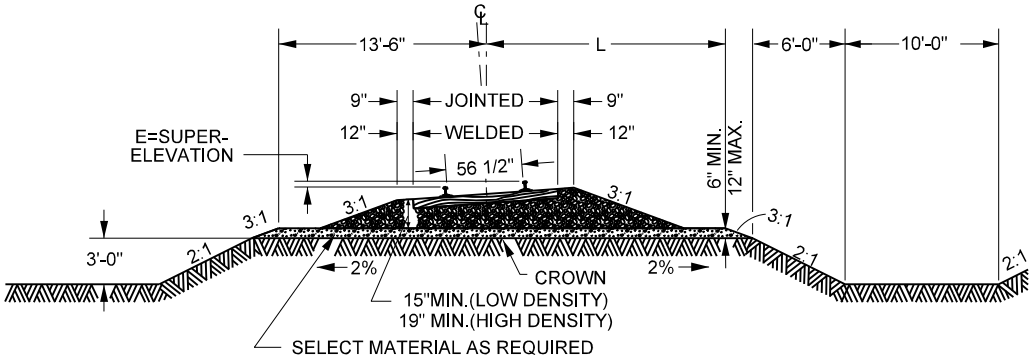

BALLAST SECTIONS FOR SINGLE CURVED TRACK WOOD TIE CONSTRUCTION

E (IN.)	L MIN.
0	13'-6"
1	14'-0"
2	14'-6"
3	15'-0"
4	15'-6"
5 OR OVER	16'-0"

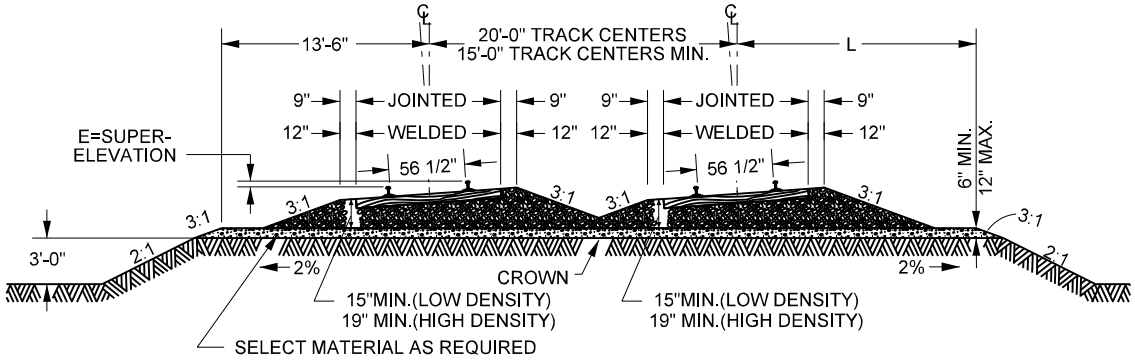

BALLAST SECTIONS FOR TWO CURVED TRACKS WOOD TIE CONSTRUCTION

NOTES:
1. SLOPES SHOWN FOR BANKS IN CUTS AND ON FILLS SHALL BE CONSIDERED STANDARD AND GENERALLY USED, BUT MAY BE MODIFIED AS REQUIRED BY LOCAL CONDITIONS AND CHARACTER OF MATERIAL.
2. BALLAST MUST BE EQUALIZED IN ADVANCE OF DRESSING SO THAT FINAL SECTION WILL CONFORM TO SLOPE REQUIREMENTS AND CHARACTER OF MATERIAL.

UNION PACIFIC RAILROAD ENGINEERING STANDARDS

ROADBED SECTION FOR WOOD TIE TRACK CONSTRUCTION

ADOPTED: SEP. 21, 2020
REVISED:
FILE NO.: 0001

STD DWG 0001 PAGE 2 OF 2

STD DWG 0001 PAGE 2 OF 2

Copyright © 2020 by Union Pacific Railroad

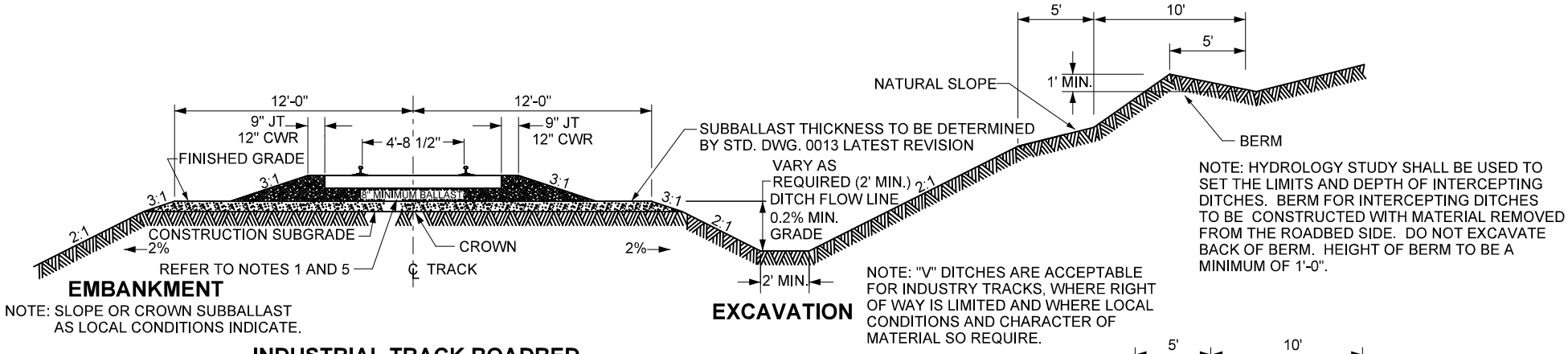

INDUSTRIAL TRACK ROADBED

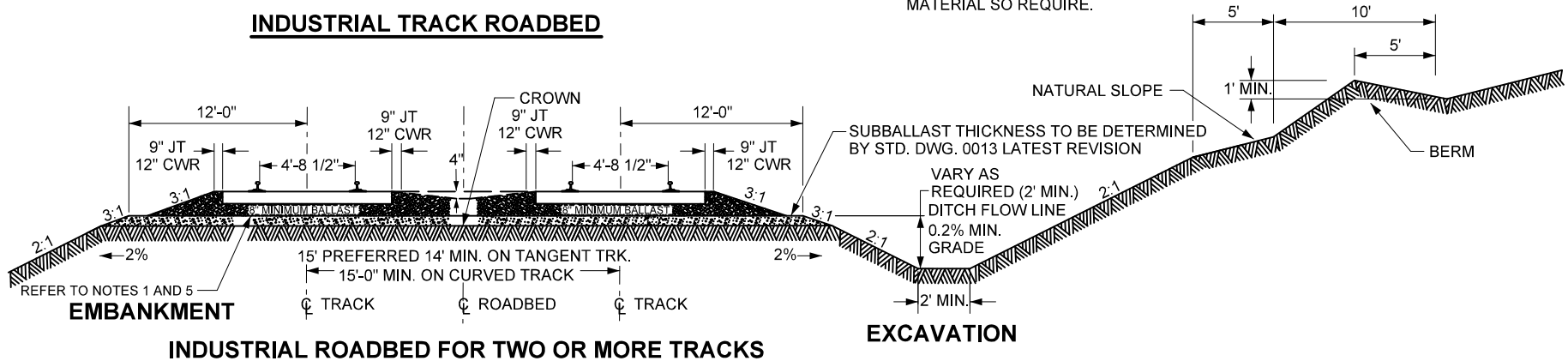

INDUSTRIAL ROADBED FOR TWO OR MORE TRACKS

NOTES:

1. IF USING CONCRETE TIES - 12" MINIMUM BALLAST UNDER TIES
   IF USING STEEL TIES - 12" MINIMUM BALLAST UNDER TIES

2. PREFERABLY TRACKS WILL NOT BE DEPRESSED BELOW GROUND LEVEL PARTICULARLY IN SNOW AND HIGH RUNOFF TERRITORIES. TRACKS CONSTRUCTED AT OR BELOW GROUND LEVEL MUST HAVE FULL STANDARD ROADBED DITCHES.

3. ALL NECESSARY DRAINAGE FACILITIES TO DIVERT RUNOFF WATER AWAY FROM TRACKS ARE TO BE PROVIDED AS APPROVED BY UNION PACIFIC RAILROAD'S AVP ENGINEERING DESIGN.

4. WALKWAYS WILL BE CONSTRUCTED TO COMPLY WITH STATE REQUIREMENTS.

5. THESE STANDARDS DO NOT APPLY TO HEAVY TONNAGE AND/OR HIGH DENSITY LINES, REFER TO STD. DWG. 0001 LATEST REVISION.

6. ALL FILL SLOPES, BERMS AND OTHER DISTURBED AREAS SHALL BE FACED WITH COVER OF MATERIAL SUITABLE FOR GROWING GRASS AND HAVING A THICKNESS OF APPROXIMATELY 6 INCHES. THE OUTER SURFACE OF THIS COVER SHALL COINCIDE WITH THE DESIGN SLOPE OF THE EMBANKMENT. MATERIAL FOR THIS COVER MAY BE OBTAINED FROM STRIPPING. SEEDING SHALL CONFORM TO THE DEPARTMENT OF TRANSPORTATION SPECIFICATION FOR THAT STATE AND REGION.

7. SLOPES SHOWN FOR BANKS IN CUTS AND ON FILLS SHALL BE CONSIDERED STANDARD AND GENERALLY USED, BUT MAY BE MODIFIED AS REQUIRED BY LOCAL CONDITIONS AND CHARACTER OF MATERIAL.

8. WHERE OFF-TRACK ROADWAY IS TO BE PROVIDED, ADD 10'-0" ADDITIONAL WIDTH TO THE ROADBED SECTION AT TOP OF SUBBALLAST ELEVATION.

STD DWG
0003B

UNION PACIFIC RAILROAD ENGINEERING STANDARDS

ROADBED SECTION FOR INDUSTRIAL TRACK CONSTRUCTION

UNION PACIFIC

ADOPTED: SEP. 21, 2020
REVISED: NOV. 1, 2021
FILE NO.: 0003

STD DWG
0003B

Copyright © 2021 by Union Pacific Railroad

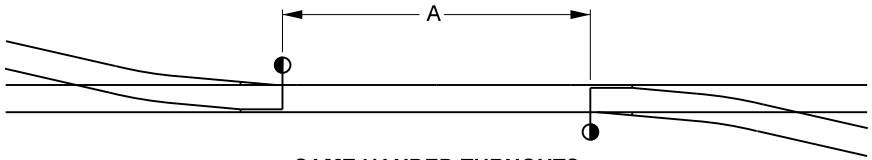

SAME HANDED TURNOUTS
PREFERRED ARRANGEMENT

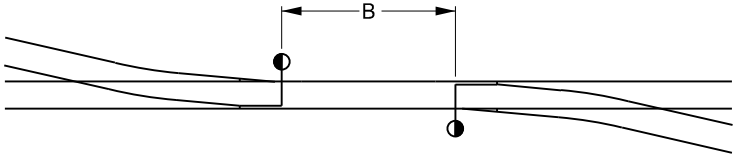

SAME HANDED TURNOUTS
MINIMUM ARRANGEMENT

SAME HANDED TURNOUTS		
TURNOUT	A	B
9	100'	60'
11	100'	60'
15	125'	90'
20	160'	120'
24	160'	120'

OPPOSITE HANDED TURNOUTS
PREFERRED ARRANGEMENT

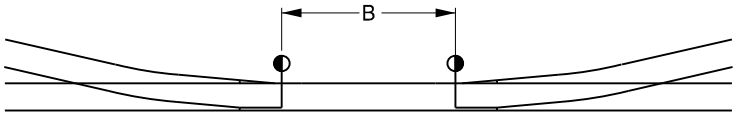

OPPOSITE HANDED TURNOUTS
MINIMUM ARRANGEMENT

OPPOSITE HANDED TURNOUTS		
TURNOUT	A	B
9	100'	60'
11	100'	60'
15	125'	90'
20	160'	120'
24	160'	120'

NOTES:
1. INSULATED JOINTS MAY BE REQUIRED AT CERTAIN LOCATIONS. SIGNAL SPACING AND CIRCUITS WILL GOVERN.

2. FOR RAIL JOINT LOCATIONS THROUGH THE TURNOUT AREAS, SEE UPRR STD DWGS 5000 THRU 5999.

3. WHERE IT APPEARS THAT GROUND CONDITIONS REQUIRE A DEVIATION FROM THE ARRANGEMENTS SHOWN, APPROVAL WILL BE CONSIDERED UPON WRITTEN REQUEST TO THE CHIEF ENGINEER, SETTING FORTH SUCH SIGNIFICANT REASONS.

UNION PACIFIC RAILROAD ENGINEERING STANDARDS

FACING POINT TURNOUT ARRANGEMENT

ADOPTED: MAY 14, 2020
REVISED:
FILE NO.: 0017

STD DWG
0017

Copyright © 2020 by Union Pacific Railroad

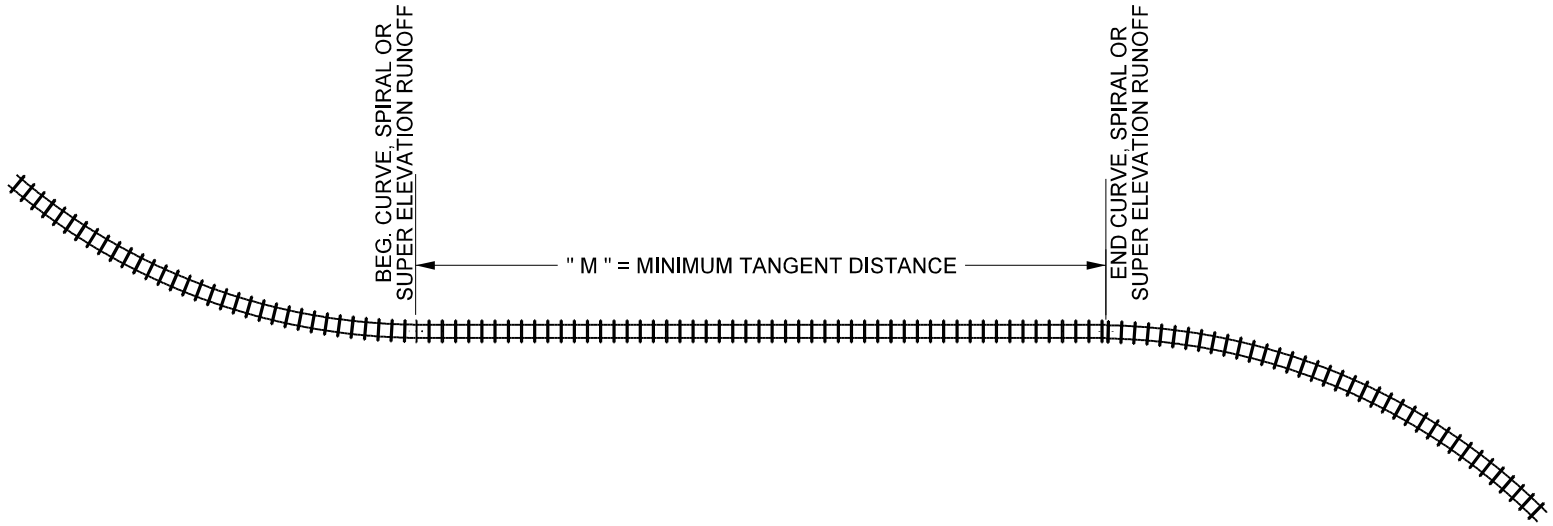

MAIN LINE AND BRANCH LINES

TRACK SPEED / TYPE	"M" DISTANCE
60 MPH AND ABOVE	500 FEET
40 MPH THRU 59 MPH	300 FEET
39 MPH AND BELOW	150 FEET

YARD AND INDUSTRY TRACKS

DEGREE OF CURVE	MINIMUM TANGENT DISTANCE "M"
7°30' OR LESS	36 FEET
GREATER THAN 7°30'	60 FEET

NOTES:
1. ADJACENT SIDINGS AND RUNNING TRACKS SHALL CONFORM TO THE CRITERIA OF THE MAIN TRACK, REGARDLESS OF THE ALLOWABLE SPEED ON THE SIDING OR RUNNING TRACK

2. CONNECTIONS TO ADJACENT TRACKS SHALL BE DESIGNED AND CONSTRUCTED AS SHOWN ON STANDARD LAYOUT PLANS FOR MAINLINE TURNOUTS AND CROSSOVERS.

3. FOR MAIN AND BRANCH TRACKS, THE POINT OF SWITCH OR POINT OF FROG OF ANY TURNOUT SHALL BE NO CLOSER THAN 200 FEET FROM THE END OF A HORIZONTAL CURVE OR SUPERELEVATION RUNOFF,UNLESS AUTHORIZED BY THE CHIEF ENGINEER.

UNION PACIFIC RAILROAD ENGINEERING STANDARDS

MINIMUM TANGENT DISTANCE

ADOPTED: SEP. 21, 2020
REVISED:
FILE NO.: 0018

STD DWG
0018

STD DWG
0018

Copyright © 2020 by Union Pacific Railroad

SUPERELEVATION RUNOFF RATES

ALL SUPERELEVATION SHALL BE RUNOFF THROUGHOUT THE LENGTH OF THE SPIRAL ON THE CURVE SO THE TRACK IS LEVEL AT THE POINT OF TANGENT. WHERE CONDITIONS MAKE IT ABSOLUTELY NECESSARY TO RUNOFF A PORTION OF THE SUPERELEVATION ON TANGENT TRACK, IT SHALL BE DONE AT THE SAME RATE OF RUNOFF AS USED ON THE SPIRAL OF THE CURVE.

COLUMN 2 IS BASED UPON A RATE OF CHANGE OF SUPERELEVATION OF 1.25" PER SECOND OF TIME, EXCEPT THE MAXIMUM RATE OF CHANGE SHALL NOT EXCEED THE RATE OF 3/4" PER 33'-0" OF DISTANCE. SUPERELEVATION RUNOFF RATES SHOWN IN THIS COLUMN ARE RECOMMENDED RATES AND SHOULD BE USED UNLESS LOCAL CONDITIONS PREVENT.

COLUMN 3 IS BASED UPON A RATE OF CHANGE OF SUPERELEVATION OF 1.50" PER SECOND OF TIME, EXCEPT THE MAXIMUM RATE OF CHANGE SHALL NOT EXCEED THE 3/4" PER 33'-0" OF DISTANCE. RATES SHOWN IN THIS COLUMN ARE MINIMUM RATES AND SHALL BE USED WHERE LOCAL CONDITIONS RESTRICT SUPERELEVATION RUNOFFS. THIS MAY OCCUR WHERE CURVES ARE LOCATED IN CLOSE PROXIMITY TO BRIDGES, TURNOUTS, OR OTHER CURVES.

MAXIMUM SPEED FOR CURVES IN MPH	PREFERRED DISTANCE REQUIRED FOR EACH INCH CHANGE IN THE SUPERELEVATION	MINIMUM DISTANCE REQUIRED FOR EACH INCH CHANGE IN THE SUPERELEVATION
COLUMN 1	COLUMN 2	COLUMN 3
20	44	44
25	44	44
30	44	44
35	44	44
40	47	44
45	53	44
50	59	49
55	65	54
60	70	59
65	76	64
70	82	69
75	88	73
80	94	78
85	100	83
90	106	88

SUPERELEVATION DESIGN CRITERIA

THE TABLES ON STANDARD DRAWINGS 0020, 0021, 0022, 0023 INDICATE DESIGN SUPERELEVATIONS FOR VARIOUS IMBALANCE CONDITIONS. THE SUPERELEVATIONS INCLUDED IN THESE DRAWINGS ARE FOR DESIGN PURPOSES AND ARE NOT MAINTENANCE STANDARDS. ACTUAL IN-TRACK SUPERELEVATIONS MAY VARY FROM THE APPROVED DESIGN ELEVATIONS WITHIN PARAMETERS OUTLINED IN THE M/W RULES AND FRA TRACK SAFETY STANDARDS WITHOUT ANY ADVERSE EFFECTS ON THE SAFETY OF TRAIN OPERATIONS. THE FOLLOWING DESIGN STANDARDS SHOULD BE USED IN SELECTING WHICH IMBALANCE CONDITION TO USE IN VARIOUS APPLICATIONS.

FOR FREIGHT TRAIN OPERATION:
USE STD DWG 0021 (1" IMBALANCE) TO DETERMINE DESIGN SUPERELEVATION PROVIDED INDICATED SUPERELEVATION IS 4" OR LESS. IF THE 1" IMBALANCE TABLE INDICATES A REQUIRED SUPERELEVATION OF OVER 4", STD DWG 0022 (2" IMBALANCE) SHOULD BE USED TO DETERMINE APPROPRIATE SUPERELEVATION.

FOR PASSENGER TRAIN OPERATION:
USE STD DWG 0023 (3" IMBALANCE) TO DETERMINE DESIGN SUPERELEVATION.

DESIGN SUPERELEVATION SHOULD NEVER EXCEED (5) INCHES.

ALL NEW DESIGN SUPERELEVATIONS WILL BE APPROVED BY THE CHIEF ENGINEER AS OUTLINED IN MW RULE 48.1.2. THE CHIEF ENGINEER MAY APPROVE EXCEPTIONS TO THIS STANDARD CONSISTENT WITH TYPICAL OPERATING PRACTICES (E.G. EQUILIBRIUM SUPERELEVATIONS WHERE MOST ALL TRAINS OPERATE AT MAXIMUM SPEED OR 2" IMBALANCE ELEVATIONS WHERE TRAINS RARELY OPERATE AT MAXIMUM SPEED). STD DWG 0023 (3" IMBALANCE) INDICATES THE MINIMUM ELEVATION/MAXIMUM SPEED ALLOWED BY THE FRA TRACK SAFETY STANDARDS AND MUST NOT BE VIOLATED.

NEW DESIGN SUPERELEVATIONS WILL BE APPROVED AND INSTALLED IN EXISTING MAIN LINE TRACKS IN CONJUNCTION WITH ANNUAL TRACK PROGRAMS WHICH INVOLVE SURFACING AND LINING.

UNION PACIFIC RAILROAD ENGINEERING STANDARDS

SUPERELEVATION OF CURVES GENERAL

ADOPTED: SEP. 21, 2020
REVISED:
FILE NO.: 0019

STD DWG 0019

Copyright © 2020 by Union Pacific Railroad

DECIMAL DEGREE OF CURVE	DEGREE OF CURVE IN DEGREE/ MINS/SECS	SPEED IN MILES PER HOUR																
		10	15	20	25	30	35	40	45	50	55	60	65	70	75	80	85	90
0.5°	0°-30'								3/4"	1"	1"	1 1/4"	1 1/2"	1 3/4"	2"	2 1/4"	2 1/2"	2 3/4"
1.0°	1°-00'						3/4"	1"	1 1/2"	1 3/4"	2"	2 1/2"	3"	3 1/2"	4"	4 1/2"	5"	
1.5°	1°-30'				3/4"	1"	1 1/4"	1 3/4"	2 1/4"	2 3/4"	3 1/4"	3 3/4"	4 1/2"					
2.0°	2°-00'			3/4"	1"	1 1/4"	1 3/4"	2 1/4"	2 3/4"	3 1/2"	4 1/4"	5"						
2.5°	2°-30'			3/4"	1"	1 1/2"	2 1/4"	2 3/4"	3 1/2"	4 1/4"								
3.0°	3°-00'			3/4"	1 1/4"	2"	2 1/2"	3 1/4"	4 1/4"									
3.5°	3°-30'		3/4"	1"	1 1/2"	2 1/4"	3"	4"	5"									
4.0°	4°-00'		3/4"	1"	1 3/4"	2 1/2"	3 1/2"	4 1/2"										
4.5°	4°-30'		3/4"	1 1/4"	2"	2 3/4"	3 3/4"	5"										
5.0°	5°-00'		3/4"	1 1/2"	2 1/4"	3 1/4"	4 1/4"											
5.5°	5°-30'		3/4"	1 1/2"	2 1/2"	3 1/2"	4 3/4"											
6.0°	6°-00'	3/4"	1"	1 3/4"	2 3/4"	3 3/4"												
6.5°	6°-30'	3/4"	1"	1 3/4"	2 3/4"	4"												
7.0°	7°-00'	3/4"	1"	2"	3"	4 1/2"												
7.5°	7°-30'	3/4"	1 1/4"	2"	3 1/4"	4 3/4"												
8.0°	8°-00'	3/4"	1 1/4"	2 1/4"	3 1/2"	5"												
9.0°	9°-00'	3/4"	1 1/2"	2 1/2"	4"													
10.0°	10°-00'	3/4"	1 1/2"	2 3/4"	4 1/2"													
11.0°	11°-00'	3/4"	1 3/4"	3"	4 3/4"													
12.0°	12°-00'	3/4"	2"	3 1/4"														

E = ELEVATION OF THE OUTSIDE RAIL IN INCHES

D = DEGREE OF CURVE IN DECIMAL DEGREE FORMAT

S = SPEED IN MILES PER HOUR

CONVERSIONS ARE AS FOLLOWS:

$E = S(0.0007SD)$

R = RADIUS OF CURVE IN FEET

$$D = \frac{5729.578}{R}$$

$$S(max.) = \sqrt{\frac{E}{(0.0007)D}}$$

NOTES:

1. THESE REQUIREMENTS DO NOT REPRESENT MAINTENANCE STANDARDS; THEREFORE, DO NOT USE THEM TO DETERMINE APPROVED ELEVATION WHEN SURFACING AND LINING EXISTING CURVES. FOR EXISTING CURVES, USE CURVE DATA INFORMATION IN THE CURVE DATA HANDBOOK OR IN THE ON-LINE INTRANET ENGINEERING PLANNING AND BUDGETING SITE.
   (http://home.uprr.com/depts/engineering/apps/efms/curves/curvesreporting.cfm)
2. DESIGNATED SUPERELEVATION MAY NOT BE LESS THAN 3/4 INCH OR GREATER THAN 5 INCHES IN ANY MAINLINE, SIDING OR INDUSTRIAL CURVE
3. REFERENCE STD DWG 0019.

UNION PACIFIC RAILROAD
ENGINEERING STANDARDS

SUPERELEVATION OF CURVES EQUILIBRIUM

ADOPTED: SEP. 21, 2020
REVISED: MAR. 31, 2021
FILE NO.: 0020

STD DWG
0020A

STD DWG
0020A

Copyright © 2021 by Union Pacific Railroad

DECIMAL DEGREE OF CURVE	DEGREE OF CURVE IN DEGREE/ MINS/SECS	SPEED IN MILES PER HOUR																
		10	15	20	25	30	35	40	45	50	55	60	65	70	75	80	85	90
0.5°	0°-30'													3/4"	1"	1 1/4"	1 1/2"	1 3/4"
1.0°	1°-00'									3/4"	1"	1 1/2"	2"	2 1/2"	3"	3 1/2"	4"	
1.5°	1°-30'							3/4"	1 1/4"	1 3/4"	2 1/4"	2 3/4"	3 1/2"	4 1/4"	5"			
2.0°	2°-00'						3/4"	1 1/4"	1 3/4"	2 1/2"	3 1/4"	4"	5"					
2.5°	2°-30'					3/4"	1 1/4"	1 3/4"	2 1/2"	3 1/4"	4 1/4"							
3.0°	3°-00'				3/4"	1"	1 1/2"	2 1/4"	3 1/4"	4 1/4"								
3.5°	3°-30'				3/4"	1 1/4"	2"	3"	4"									
4.0°	4°-00'				3/4"	1 1/2"	2 1/2"	3 1/2"	4 3/4"									
4.5°	4°-30'			3/4"	1"	1 3/4"	2 3/4"	4"										
5.0°	5°-00'			3/4"	1 1/4"	2 1/4"	3 1/4"	4 1/2"										
5.5°	5°-30'			3/4"	1 1/2"	2 1/2"	3 3/4"											
6.0°	6°-00'			3/4"	1 3/4"	2 3/4"	4 1/4"											
6.5°	6°-30'			3/4"	1 3/4"	3"	4 1/2"											
7.0°	7°-00'		3/4"	1"	2"	3 1/2"	5"											
7.5°	7°-30'		3/4"	1"	2 1/4"	3 3/4"												
8.0°	8°-00'		3/4"	1 1/4"	2 1/2"	4"												
9.0°	9°-00'		3/4"	1 1/2"	3"	4 1/4"												
10.0°	10°-00'		3/4"	1 3/4"	3 1/2"													
11.0°	11°-00'		3/4"	2"	3 3/4"													
12.0°	12°-00'	3/4"	1"	2 1/4"	4 1/4"													

E = ELEVATION OF THE OUTSIDE RAIL IN INCHES

D = DEGREE OF CURVE IN DECIMAL DEGREE FORMAT

S = SPEED IN MILES PER HOUR

CONVERSIONS ARE AS FOLLOWS:

$E = S(0.0007SD) - 1"$

R = RADIUS OF CURVE IN FEET

$$D = \frac{5729.578}{R}$$

$$S(max.) = \sqrt{\frac{E + 1}{(0.0007)D}}$$

NOTES:

1. THESE REQUIREMENTS DO NOT REPRESENT MAINTENANCE STANDARDS; THEREFORE, DO NOT USE THEM TO DETERMINE APPROVED ELEVATION WHEN SURFACING AND LINING EXISTING CURVES. FOR EXISTING CURVES, USE CURVE DATA INFORMATION IN THE CURVE DATA HANDBOOK OR IN THE ON-LINE INTRANET ENGINEERING PLANNING AND BUDGETING SITE. (http://home.uprr.com/depts/engineering/apps/efms/curves/curvesreporting.cfm)
2. DESIGNATED SUPERELEVATION MAY NOT BE LESS THAN 3/4 INCH OR GREATER THAN 5 INCHES IN ANY MAINLINE, SIDING OR INDUSTRIAL CURVE.
3. REFERENCE STD DWG 0019.

UNION PACIFIC RAILROAD
ENGINEERING STANDARDS

SUPERELEVATION OF CURVES 1" UNBALANCE

ADOPTED: SEP. 21, 2020
REVISED: MAR. 31, 2021
FILE NO.: 0021

STD DWG
0021A

Copyright © 2021 by Union Pacific Railroad

STD DWG
0021A

DECIMAL DEGREE OF CURVE	DEGREE OF CURVE IN DEGREE/ MINS/SECS	SPEED IN MILES PER HOUR																
		10	15	20	25	30	35	40	45	50	55	60	65	70	75	80	85	90
0.5°	0°-30'																	3/4"
1.0°	1°-00'											3/4"	1"	1 1/2"	2"	2 1/2"	3"	3 3/4"
1.5°	1°-30'									3/4"	1 1/4"	1 3/4"	2 1/2"	3 1/4"	4"	4 3/4"		
2.0°	2°-00'								3/4"	1 1/2"	2 1/4"	3"	4"	4 3/4"				
2.5°	2°-30'							3/4"	1 1/2"	2 1/4"	3 1/4"	4 1/4"						
3.0°	3°-00'						3/4"	1 1/4"	2 1/4"	3 1/4"	4 1/4"							
3.5°	3°-30'					3/4"	1"	2"	3"	4 1/4"								
4.0°	4°-00'					3/4"	1 1/2"	2 1/2"	3 3/4"	5"								
4.5°	4°-30'					3/4"	1 3/4"	3"	4 1/2"									
5.0°	5°-00'				3/4"	1 1/4"	2 1/4"	3 1/2"	5"									
5.5°	5°-30'				3/4"	1 1/2"	2 3/4"	4 1/4"										
6.0°	6°-00'				3/4"	1 3/4"	3 1/4"	4 3/4"										
6.5°	6°-30'				3/4"	2"	3 1/2"											
7.0°	7°-00'			3/4"	1"	2 1/2"	4"											
7.5°	7°-30'			3/4"	1 1/4"	2 3/4"	4 1/2"											
8.0°	8°-00'			3/4"	1 1/2"	3"	4 3/4"											
9.0°	9°-00'			3/4"	2"	3 1/2"												
10.0°	10°-00'			3/4"	2 1/2"	4 1/4"												
11.0°	11°-00'		3/4"	1"	2 3/4"	5"												
12.0°	12°-00'		3/4"	1 1/4"	3 1/4"													

E = ELEVATION OF THE OUTSIDE RAIL IN INCHES

D = DEGREE OF CURVE IN DECIMAL DEGREE FORMAT

S = SPEED IN MILES PER HOUR

CONVERSIONS ARE AS FOLLOWS:

$E = S(0.0007SD) - 2"$

R = RADIUS OF CURVE IN FEET

$$D = \frac{5729.578}{R}$$

$$S(max.) = \sqrt{\frac{E + 2}{(0.0007)D}}$$

NOTES:

1. THESE REQUIREMENTS DO NOT REPRESENT MAINTENANCE STANDARDS; THEREFORE, DO NOT USE THEM TO DETERMINE APPROVED ELEVATION WHEN SURFACING AND LINING EXISTING CURVES. FOR EXISTING CURVES, USE CURVE DATA INFORMATION IN THE CURVE DATA HANDBOOK OR IN THE ON-LINE INTRANET ENGINEERING PLANNING AND BUDGETING SITE. (http://home.uprr.com/depts/engineering/apps/efms/curves/curvesreporting.cfm)
2. DESIGNATED SUPERELEVATION MAY NOT BE LESS THAN 3/4 INCH OR GREATER THAN 5 INCHES IN ANY MAINLINE, SIDING OR INDUSTRIAL CURVE.
3. REFERENCE STD DWG 0019.

UNION PACIFIC RAILROAD
ENGINEERING STANDARDS

SUPERELEVATION OF CURVES 2" UNBALANCE

ADOPTED: SEP. 21, 2020
REVISED: MAR. 31, 2021
FILE NO.: 0022

STD DWG
0022A

STD DWG
0022A

Copyright © 2021 by Union Pacific Railroad

DECIMAL DEGREE OF CURVE	DEGREE OF CURVE IN DEGREE/ MINS/SECS	SPEED IN MILES PER HOUR																
		10	15	20	25	30	35	40	45	50	55	60	65	70	75	80	85	90
0.5°	0°-30'																	3/4"
1.0°	1°-00'													3/4"	1"	1 1/2"	2 1/4"	2 3/4"
1.5°	1°-30'										3/4"	1"	1 1/2"	2 1/4"	3"	3 3/4"	4 3/4"	
2.0°	2°-00'									3/4"	1 1/4"	2 1/4"	3"	4"	5"			
2.5°	2°-30'								3/4"	1 1/2"	2 1/2"	3 1/2"	4 1/2"					
3.0°	3°-00'							3/4"	1 1/4"	2 1/4"	3 1/2"	4 3/4"						
3.5°	3°-30'						3/4"	1"	2"	3 1/4"	4 1/2"							
4.0°	4°-00'						3/4"	1 1/2"	2 3/4"	4"								
4.5°	4°-30'					3/4"	1"	2 1/4"	3 1/2"	5"								
5.0°	5°-00'					3/4"	1 1/2"	2 3/4"	4 1/4"									
5.5°	5°-30'					3/4"	1 3/4"	3 1/4"	5"									
6.0°	6°-00'				3/4"	1"	2 1/4"	3 3/4"										
6.5°	6°-30'				3/4"	1 1/4"	2 3/4"	4 1/2"										
7.0°	7°-00'				3/4"	1 1/2"	3 1/4"	5"										
7.5°	7°-30'				3/4"	1 3/4"	3 1/2"											
8.0°	8°-00'				3/4"	2 1/4"	4"											
9.0°	9°-00'			3/4"	1"	2 3/4"	4 3/4"											
10.0°	10°-00'			3/4"	1 1/2"	3 1/2"												
11.0°	11°-00'			3/4"	2"	4"												
12.0°	12°-00'			3/4"	2 1/4"	4 3/4"												

E = ELEVATION OF THE OUTSIDE RAIL IN INCHES

D = DEGREE OF CURVE IN DECIMAL DEGREE FORMAT

S = SPEED IN MILES PER HOUR

CONVERSIONS ARE AS FOLLOWS:

$E = S(0.0007SD) - 3"$

R = RADIUS OF CURVE IN FEET

$$D = \frac{5729.578}{R}$$

$$S(max.) = \sqrt{\frac{E + 3}{(0.0007)D}}$$

NOTES:

1. THESE REQUIREMENTS DO NOT REPRESENT MAINTENANCE STANDARDS; THEREFORE, DO NOT USE THEM TO DETERMINE APPROVED ELEVATION WHEN SURFACING AND LINING EXISTING CURVES. FOR EXISTING CURVES, USE CURVE DATA INFORMATION IN THE CURVE DATA HANDBOOK OR IN THE ON-LINE INTRANET ENGINEERING PLANNING AND BUDGETING SITE. (http://home.uprr.com/depts/engineering/apps/efms/curves/curvesreporting.cfm)
2. DESIGNATED SUPERELEVATION MAY NOT BE LESS THAN 3/4 INCH OR GREATER THAN 5 INCHES IN ANY MAINLINE, SIDING OR INDUSTRIAL CURVE.
3. REFERENCE STD DWG 0019.

UNION PACIFIC RAILROAD
ENGINEERING STANDARDS

SUPERELEVATION OF CURVES 3" UNBALANCE FRA MAX ALLOWABLE

ADOPTED: SEP. 21, 2020
REVISED: MAR. 31, 2021
FILE NO.: 0023

STD DWG
0023A

STD DWG
0023A

Copyright © 2021 by Union Pacific Railroad

WIRE LINES WITH LESS THAN 750 VOLTS IN NON-ELECTRIFIED TERRITORY
27'-0" ABOVE TOP OF RAIL MINIMUM
(IN ELECTRIFIED TERRITORY–35'-0" ABOVE TOP OF RAIL MINIMUM)

(SEE M/W RULE 54.1 FOR HIGHER VOLTAGES)

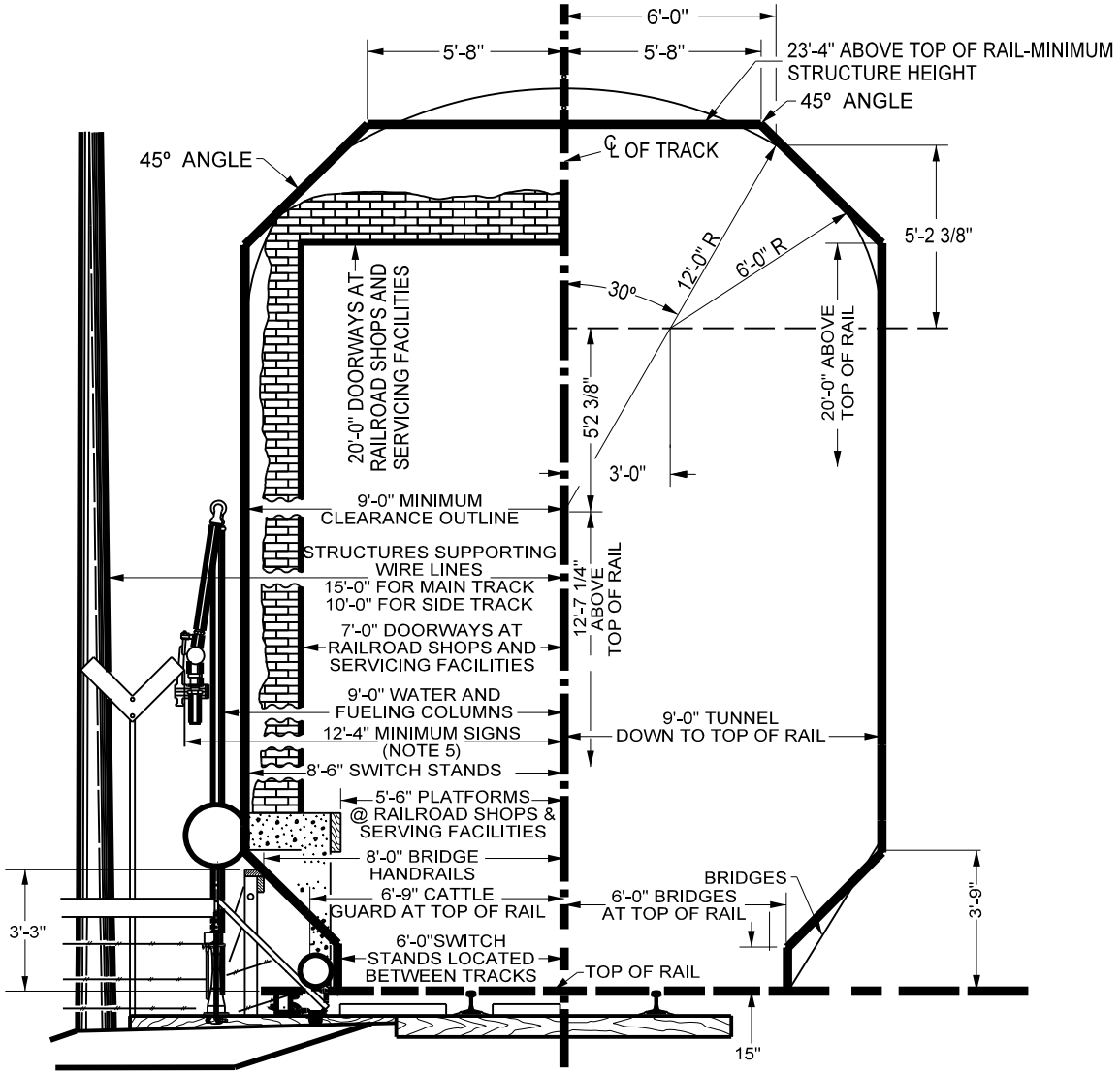

THROUGH RAILROAD OWNED STRUCTURES AND FACILITIES

GENERAL NOTES (SEE PAGE 3 FOR TRACK NOTES):

1. ALL STRUCTURES OR FACILITIES NOT SHOWN MUST BE AT LEAST 9'-0" FROM THE CENTER LINE OF TRACK AND AT LEAST 23'-4" ABOVE THE TOP OF RAIL.
2. CLEARANCES FOR STRUCTURES OR FACILITIES ON CURVES MUST BE INCREASED LATERALLY ON EACH SIDE 1 1/2" PER EACH DEGREE OF CURVATURE, EXTENDING TO 80'-0" BEYOND THE END OF THE CURVE.
3. ANY FACILITIES FALLING WITHIN THESE DIMENSIONS WILL BE CONSIDERED IMPAIRED CLEARANCE, SUBJECT TO AGREEMENT, AND MUST BE APPROVED PRIOR TO CONSTRUCTION BY UNION PACIFIC RAILROAD'S OFFICE OF THE CHIEF ENGINEER OF DESIGN.
4. WHERE STATE OR LOCAL LAWS REQUIRE GREATER CLEARANCES THAN SHOWN HERE, THOSE LAWS SHALL PREVAIL.
5. SIGNS FOR INTERIOR MAIN TRACKS IN MULTIPLE MAIN TRACK TERRITORY WILL BE A MINIMUM OF 9'-0" FROM CENTER OF TRACK.

UNION PACIFIC RAILROAD ENGINEERING STANDARDS

STANDARD MINIMUM OPERATING CLEARANCES

ADOPTED: SEP. 21, 2020
REVISED:
FILE NO.: 0038

STD DWG 0038 PAGE 1 OF 3

STD DWG 0038 PAGE 1 OF 3

Copyright © 2020 by Union Pacific Railroad

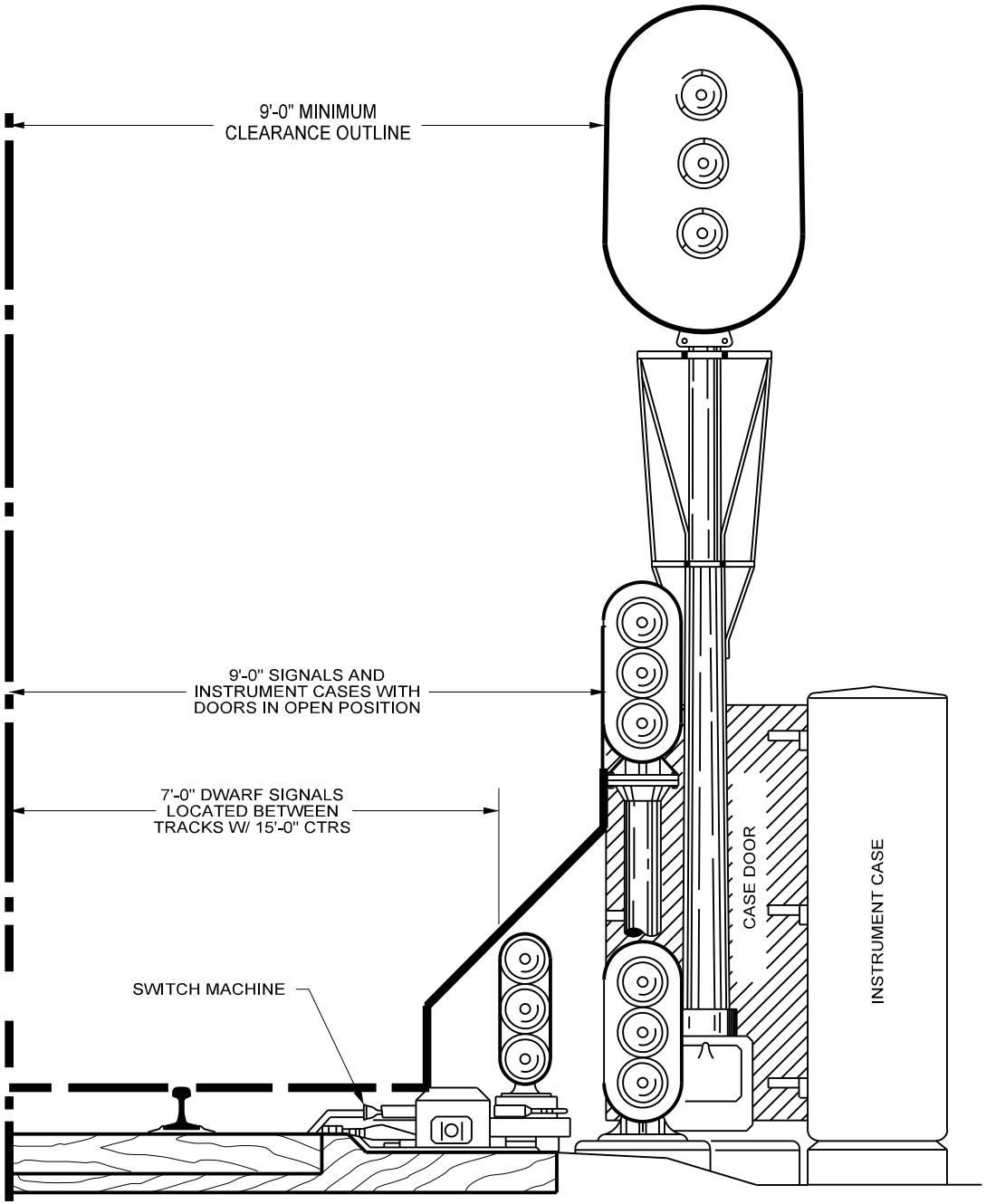

SIGNAL STRUCTURES AND SWITCH MACHINES
THROUGH RAILROAD OWNED STRUCTURES

UNION PACIFIC RAILROAD
ENGINEERING STANDARDS

STANDARD MINIMUM OPERATING CLEARANCES

ADOPTED: SEP. 21, 2020
REVISED:
FILE NO.: 0038

STD DWG 0038 PAGE 2 OF 3

STD DWG 0038 PAGE 2 OF 3

Copyright © 2020 by Union Pacific Railroad

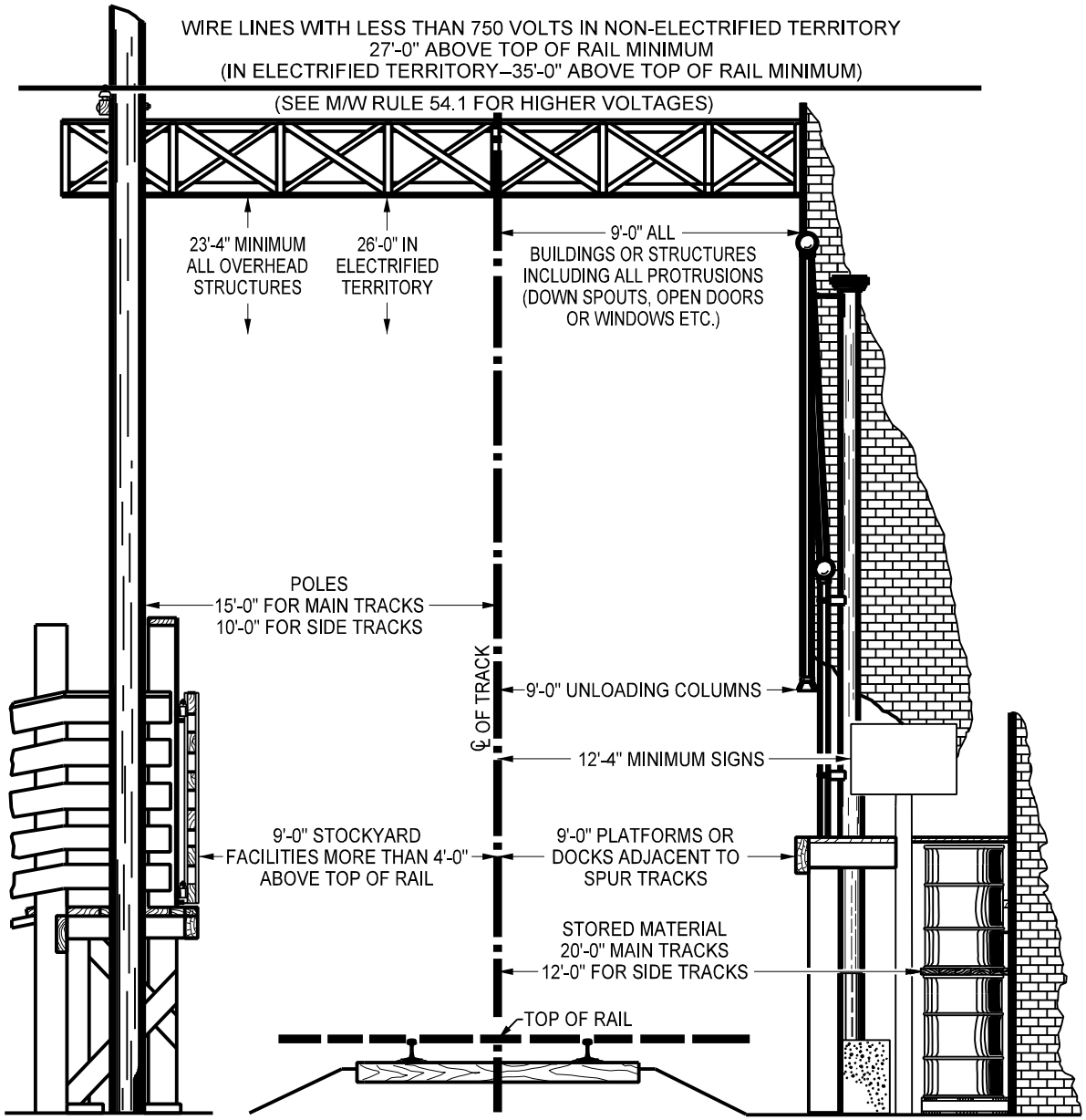

THROUGH INDUSTRY OWNED STRUCTURES AND FACILITIES

TRACK NOTES (SEE PAGE 1 FOR GENERAL NOTES):

TRACK CENTERS:

1. TWO OR MORE MAIN TRACKS WILL BE A MINIMUM OF 15'-0" CENTER TO CENTER. SIDE TRACKS ADJACENT TO A MAIN TRACK WILL BE A MINIMUM OF 15'-0" CENTER TO CENTER.
2. ANY TWO OR MORE SIDE OR INDUSTRY TRACKS WILL BE A MINIMUM OF 14'-0" CENTER TO CENTER.
3. LADDER TRACKS AND ANY ADJACENT TRACK WILL BE A MINIMUM OF 20'-0" CENTER TO CENTER.
4. TEAM TRACKS IN PAIRS MAY BE A MINIMUM OF 13'-0" CENTER TO CENTER.
5. ELECTRIFIED TERRITORY REFERS TO TRACKS WHERE ELECTRIC LOCOMOTIVES OPERATE.
6. ALL VERTICAL CLEARANCES ARE MEASURED FROM THE TOP OF HIGHEST RAIL.
7. FOR INDUSTRY OWNED STRUCTURES AND FACILITIES, ALL HORIZONTAL CLEARANCES SHALL BE MAINTAINED FROM THE TOP OF RAIL.

SUPERELEVATION:

1. AN ADDITIONAL 4 1/4" HORIZONTAL CLEARANCE AT 20'-0" ABOVE TOP OF RAIL MUST BE ALLOWED ON THE LOW RAIL SIDE FOR EACH ONE INCH OF SUPERELEVATION TAPERING TO ZERO INCHES ADDITIONAL CLEARANCE AT THE TOP OF RAIL.

UNION PACIFIC RAILROAD ENGINEERING STANDARDS

STANDARD MINIMUM OPERATING CLEARANCES

ADOPTED: SEP. 21, 2020
REVISED:
FILE NO.: 0038

STD DWG 0038 PAGE 3 OF 3

STD DWG 0038 PAGE 3 OF 3

Copyright © 2020 by Union Pacific Railroad

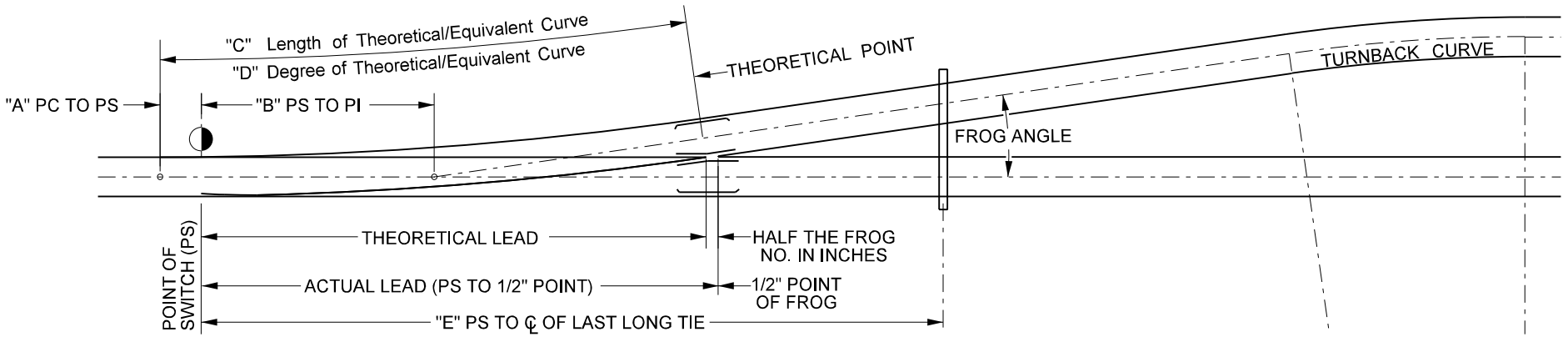

THEORETICAL TURNOUT DESIGN DATA
(SEE INDIVIDUAL TURNOUT STANDARDS FOR ACTUAL TURNOUT GEOMETRY)

FROG NO.	FROG ANGLE	SWITCH LENGTH	ACTUAL LEAD	THEO. LEAD	DESIGN RADIUS	"A"	"B"	"C"	"D"	"E"	TURNBACK CURVE	TURNBACK RADIUS
7	8°10'16"	16.5'	64.52'	64.23'	461.44	1.69'	31.27'	65.81'	12°26'29"	94'-7"	12°30'00"	459.28'
8.5	6°43'59"	15.0'	70.19'	69.84'	680.26	10.20'	29.82'	79.94'	8°25'49"	100'-0"	8°30'00"	674.69'
9	6°21'35"	16.5'	72.92'	72.54'	762.68'	12.20'	30.17'	84.66'	7°31'04"	109'-8"	7°30'00"	764.49'
9 C.S.	6°21'35"	16.5'	72.92'	72.54'	762.68'	12.20'	30.17'	84.66'	7°31'04"	107'-4 1/2"	7°30'00"	764.49'
9 STEEL	6°21'35"	16.5'	72.92'	72.54'	762.68'	12.20'	30.17'	84.66'	7°31'04"	105'-7"	7°30'00"	764.49'
10	5°43'29"	16.5'	80.30'	79.89'	941.72'	14.29'	32.80'	94.09'	6°05'13"	120'-5"	6°00'00"	955.37'
10 CONC	5°43'29"	16.5'	80.30'	79.89'	941.72'	14.29'	32.80'	94.09'	6°05'13"	120'-5"	6°00'00"	955.37'
11 C.S.	5°12'18"	19.5'	83.50'	83.04'	1139.44'	20.54'	31.25'	103.51'	5°01'48"	124'-7"	5°00'00"	1146.28'
11 CONC	5°12'18"	19.5'	83.50'	83.04'	1139.44'	20.54'	31.25'	103.51'	5°01'48"	124'-3 1/2"	5°00'00"	1146.28'
11 STEEL	5°12'18"	19.5'	83.50'	83.04'	1139.44'	20.54'	31.25'	103.51'	5°01'48"	123'-2"	5°00'00"	1146.28'
14	4°05'27"	24.0'	115.70'	115.11'	1845.60'	16.71'	49.20'	131.77'	3°06'17"	175'-10 1/2"	3°00'00"	1910.08'
14 CONC	4°05'27"	24.0'	115.70'	115.11'	1845.60'	16.71'	49.20'	131.77'	3°06'17"	176'-1 3/8"	3°00'00"	1910.08'
15 C.S.	3°49'06"	26.0'	111.23'	110.60'	2119.01'	30.66'	39.97	141.22'	2°42'15"	179'-9 1/2"	3°00'00"	1910.08'
15 CONC	3°49'06"	26.0'	111.23'	110.60'	2119.01'	30.66'	39.97	141.22'	2°42'15"	169'-0 1/2"	3°00'00"	1910.08'
20	2°51'51"	39.0'	156.06	155.22	3766.59'	33.10'	61.06	188.29'	1°31'16"	243'-10 5/8"	1°30'00"	3819.83'
20 CONC	2°51'51"	39.0'	156.06	155.22	3766.59'	33.10'	61.06	188.29'	1°31'16"	234'-8"	1°30'00"	3819.83'
20 C.S.	2°51'51"	39.0'	156.06	155.22	3766.59'	33.10'	61.06	188.29'	1°31'16"	249'-0 11/16"	1°30'00"	3819.83'
24 C.S.	2°23'13"	39.0'	177.25'	176.25'	5424.08'	49.75'	63.25'	225.97'	1°03'23"	282'-7 3/4"	1°00'00"	5729.65'
24 CONC	2°23'13"	39.0'	177.25'	176.25'	5424.08'	49.75'	63.25'	225.97'	1°03'23"	267'-0"	1°00'00"	5729.65'
30	1°54'35"	115.5'	256.53	255.28	8475.05'	27.22'	114.03'	282.48'	0°40'34"	372'-4 5/8"	0°45'00"	7639.49'

NOTES:
1. THE INFORMATION INCLUDED IN THIS DWG IS THEORETICAL DESIGN DATA AND DOES NOT REFLECT ACTUAL TURNOUT GEOMETRY.
2. FOR ACTUAL TURNBACK CURVE OFFSETS, REFER TO STD. DWG. 5004.

UNION PACIFIC RAILROAD ENGINEERING STANDARDS

DESIGN DATA FOR TURNOUT LAYOUT

ADOPTED: SEP. 21, 2020
REVISED:
FILE NO.: 0050

STD DWG 0050

STD DWG 0050

Copyright © 2020 by Union Pacific Railroad

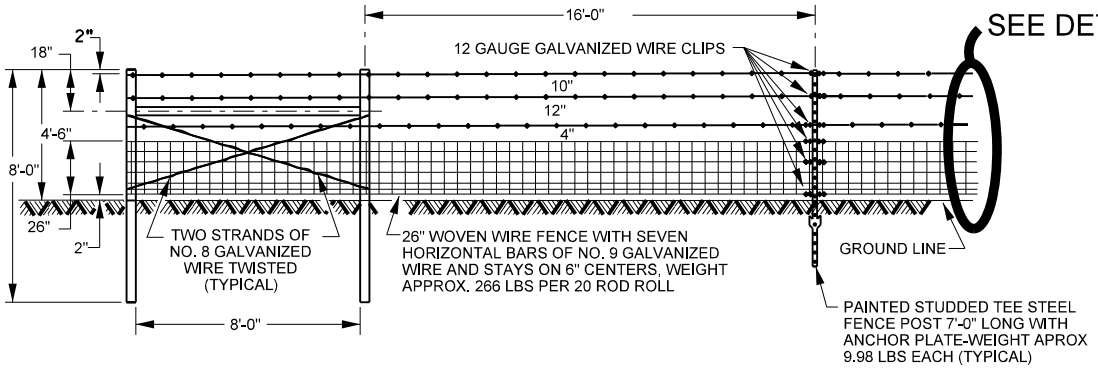

SEE DETAIL A

STANDARD HOG TIGHT FENCE

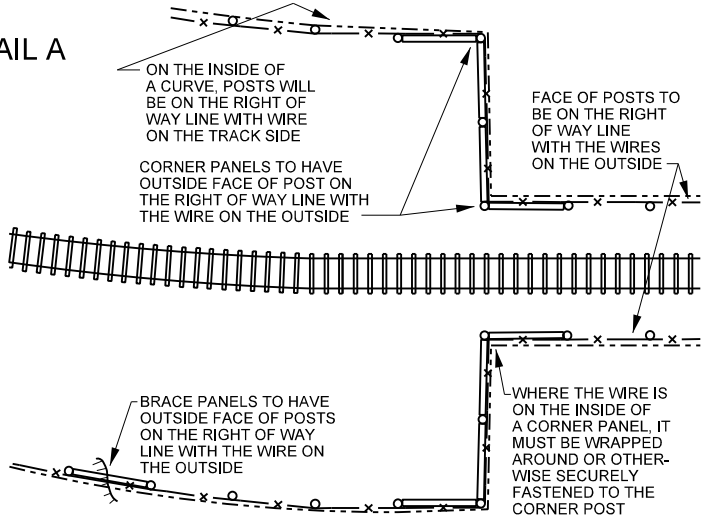

GENERAL ARRANGEMENT

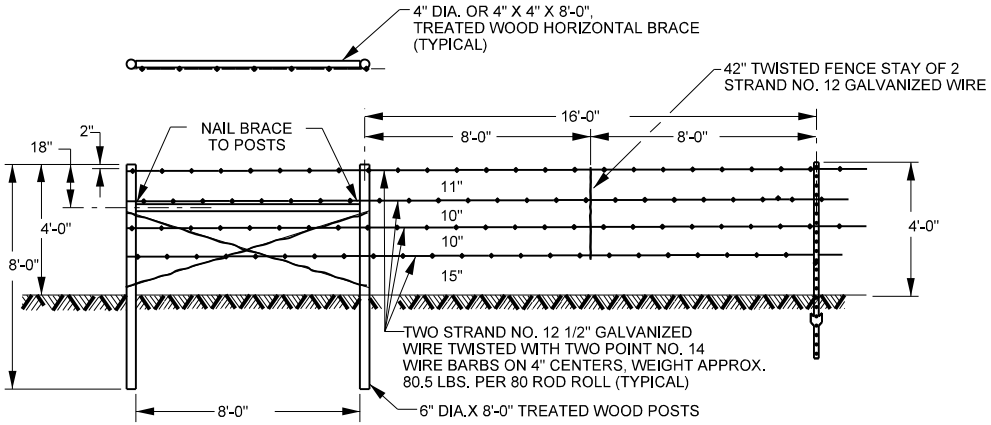

STANDARD BARBED WIRE FENCE

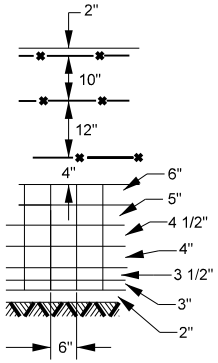

DETAIL A

NOTES:
1. COMPLY WITH ALL STATE AND LOCAL REGULATIONS REGARDING CONSTRUCTION AS THEY MAY VARY FROM THIS STANDARD.
2. HOG TIGHT FENCE TO BE INSTALLED WHERE REQUESTED BY THE ADJACENT PROPERTY OWNER AND THE OTHER SIDES OF THE ENCLOSURE ARE SIMILARLY PROTECTED.
3. DIMENSIONS OF WOOD PANEL POST AND BRACES SHALL NOT VARY MORE THAN 1/2" UNDERSIZE OR 1" OVERSIZE IN DIA. OR 3" IN LENGTH.
4. BRACE PANELS TO BE INSTALLED AT ALL GRADE BREAKS, END OF FENCE, EACH SIDE OF GATE OPENINGS AT CATTLE GUARDS AND NOT MORE THAN 500' APART.
5. GATE SHALL BE 182 LBS., 52" HIGH, 15'-10 3/4" LONG. FRAME TO BE ONE PIECE 1 5/8" DIA. STEEL TUBE, .066" WALL. RAILS TO BE HIGH STRENGTH 16 GAUGE S-BEND SHAPE. STAYS TO BE ROLL-FORMED 12 GAUGE WELDED IN PAIRS. LATCH DOUBLE PIN 1/2" X 1" STEEL WITH LOCK AND SADDLE HORSE TYPE HANDLE. HINGE TO BE FULL WRAP OMEGA STYLE 1/4" STEEL, BOTTOM IN FIXED POSITION AND TOP WILL ADJUST VERTICALLY 5" BETWEEN RAILS. LATCH PLATE TO BE ONE PIECE 4" X 4". LATCH PIN TO BE 1 1/2" X 1 3/4" AND NOTCH POST TO ACCOMMODATE LATCH PIN. LATCH PIN EXTENDS 3" PAST TUBE.

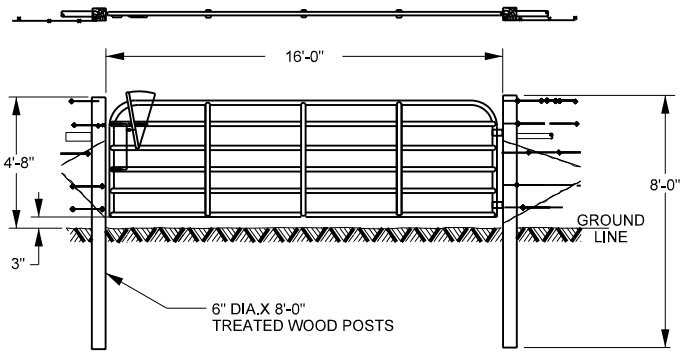

POWDER RIVER H.D. STOCKYARD GATE

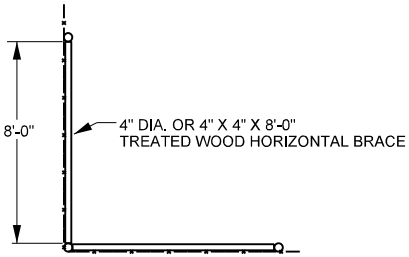

CORNER PANEL

UNION PACIFIC RAILROAD ENGINEERING STANDARDS

STANDARD RIGHT OF WAY FENCE

UNION PACIFIC

ADOPTED: SEP. 21, 2020
REVISED: NOV. 25, 2020
FILE NO.: 0075

STD DWG
0075A

STD DWG
0075A

Copyright © 2020 by Union Pacific Railroad

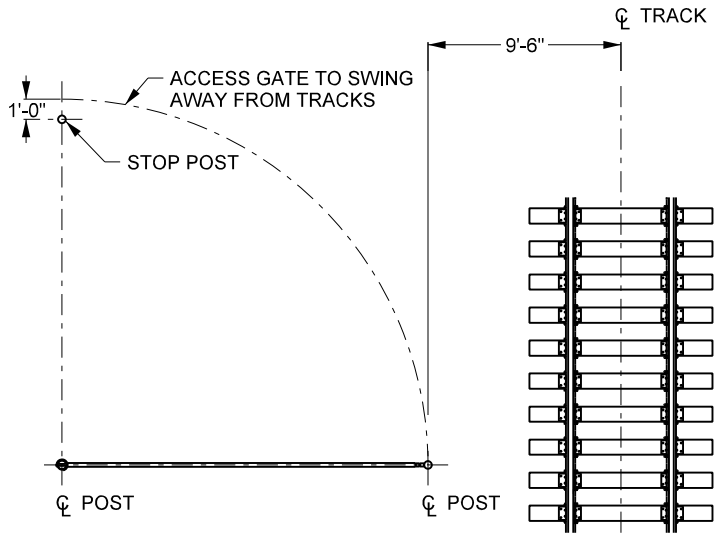

TYPICAL GATE LOCATION PLAN

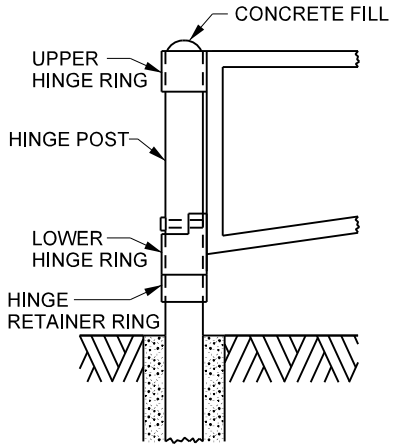

HINGE POST DETAIL

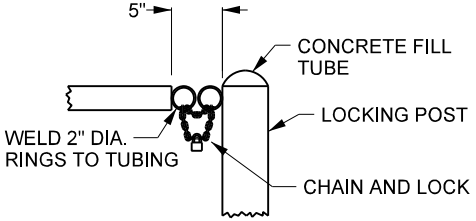

LOCKING DETAIL

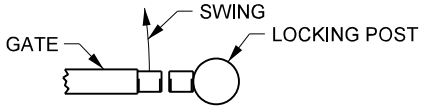

LOCKING POST PLAN DETAIL

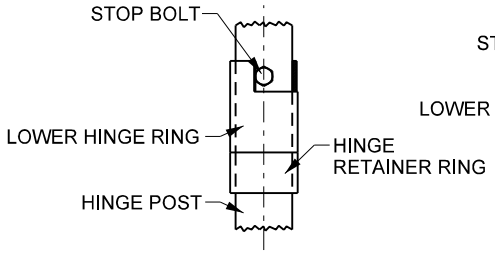

HINGE RING END DETAIL

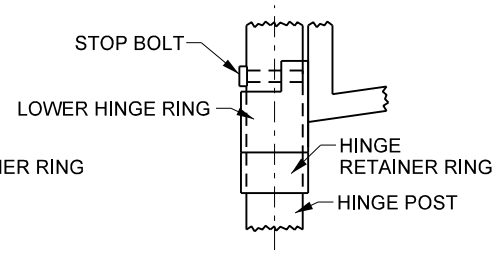

LOWER HINGE RING DETAIL

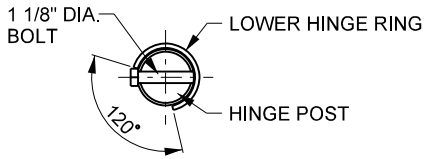

HINGE POST PLAN DETAIL

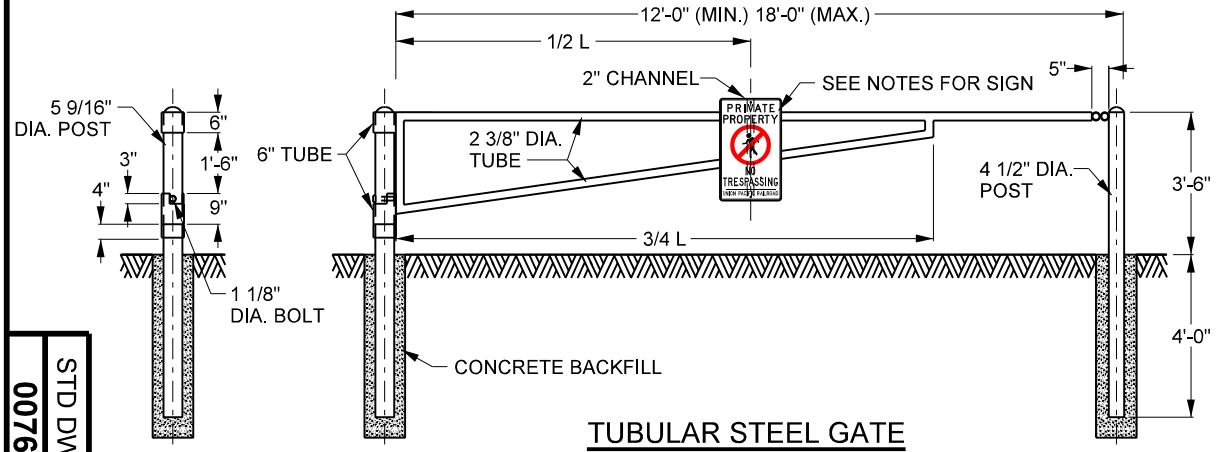

TUBULAR STEEL GATE

NOTES:
1. SECURITY GATES WILL BE PLACED AT LEAST 25 FEET FROM THE ROADWAY.
2. GATE TO BE USED AT LOCATIONS WHERE MAXIMUM SECURITY IS REQUIRED.
3. FOR MOUNTING OF PRIVATE PROPERTY SIGN, BOLT SIGN TO 2" CHANNEL WELDED TO GATE. FOR SIGN DETAILS, SEE PLAN 0538.
4. CONCRETE BACKFILL TO BE 6" MINIMUM 2500 PSI.

ITEM	ITEM NO.
12' GATE	598-9200
14' GATE	598-9202
16' GATE	598-9204
18' GATE	598-9206

UNION PACIFIC RAILROAD ENGINEERING STANDARDS

HIGH SECURITY GATE AT GRADE CROSSING

ADOPTED: SEP. 21, 2020
REVISED:
FILE NO.:0076

STD DWG 0076

STD DWG 0076

Copyright © 2020 by Union Pacific Railroad

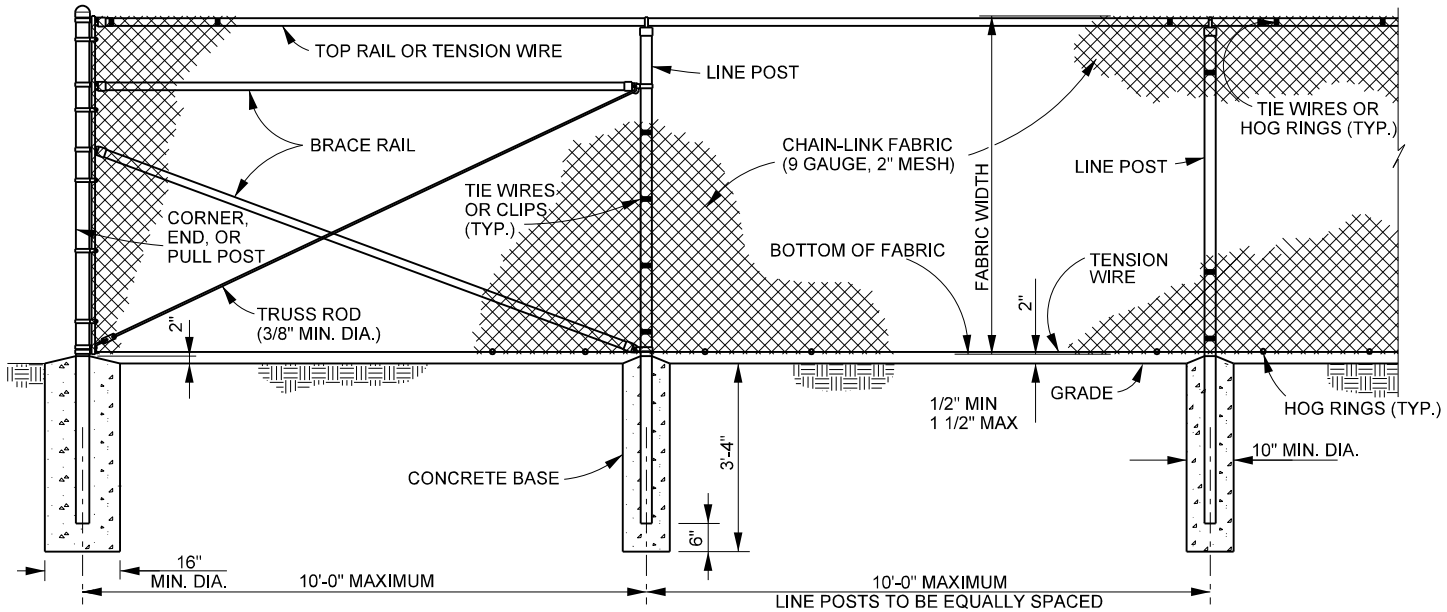

FENCE LEGEND:

TYPE FE5 - CHAIN-LINK FENCE WITHOUT BARBED-WIRE APRON
TYPE FE6 - CHAIN-LINK FENCE W/BARBED-WIRE ON SINGLE OUTRIGGER
TYPE FE7 - CHAIN-LINK FENCE W/BARBED-WIRE ON DOUBLE OUTRIGGER
TYPE FE8 - CHAIN-LINK FENCE W/BARBED-WIRE AND BARBED-TAPE ON DOUBLE OUTRIGGER
TYPE FE9 - EXPANDED METAL FENCE WITHOUT BARBED WIRE APRON (SEE PAGE 4 FOR DETAILS)
TR - FENCE WITH TOP AND BOTTOM RAILS
TBR - FENCE WITH TOP RAIL AND TENSION WIRE AT BOTTOM
TWB - TENSION WIRE TOP AND BOTTOM
TWBR - FENCE WITH TOP TENSION WIRE AND BOTTOM RAIL
FINAL NUMBER IS FABRIC WIDTH IN INCHES.

EXAMPLES:

FE6-TR-72 - CHAIN-LINK SECURITY FENCE WITH BARBED-WIRE ON SINGLE OUTRIGGER, TOP RAIL, AND 72 INCH FABRIC WIDTH.

FE5-TWB-84 - CHAIN-LINK SECURITY FENCE WITH NO APRON, TOP AND BOTTOM TENSION WIRE, AND 84 INCH FABRIC WIDTH.

NOTES:
SEE PAGE 3 FOR NOTES AND DETAILS

UNION PACIFIC RAILROAD ENGINEERING STANDARDS

HIGH SECURITY FENCING

ADOPTED: OCT. 14, 2020
REVISED: DEC. 7, 2020
FILE NO.: 0077

STD DWG 0077A PAGE 1 OF 4

STD DWG 0077A PAGE 1 OF 4

Copyright © 2020 by Union Pacific Railroad

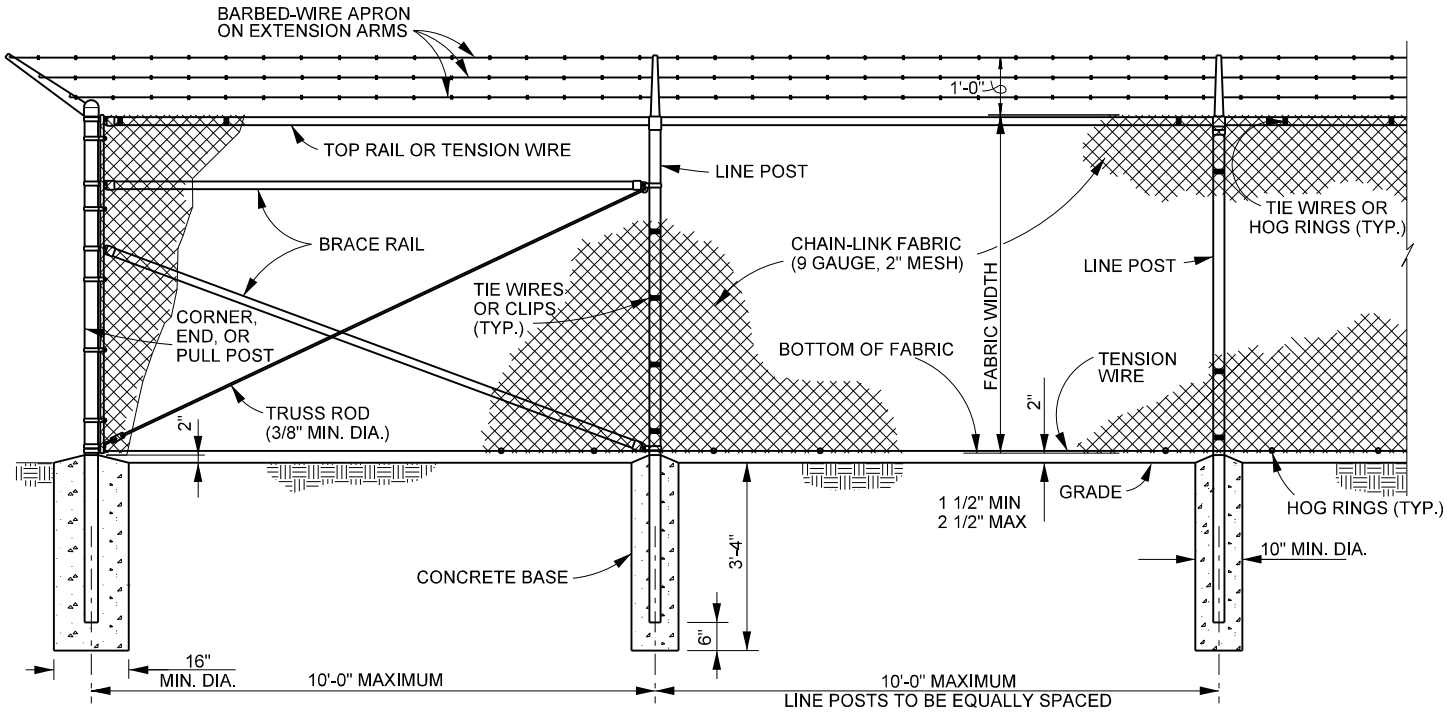

STEEL POST SCHEDULE			
USE AND SECTION	MINIMUM OUTSIDE DIMENSIONS (NOMINAL)		
	FABRIC WIDTH 72" OR LESS	FABRIC WIDTH 84" TO 96"	FABRIC WIDTH 108" AND OVER
CORNER, END & PULL POSTS			
TUBULAR - ROUND	2.375" O.D.	2.875" O.D.	4.00" O.D.
TUBULAR - SQUARE	2.00" SQ.	2.50" SQ.	3.00" SQ.
C-SECTION (ROLL-FORMED)	3.50" x 3.50"	3.50" x 3.50"	———
LINE POSTS			
TUBULAR - ROUND	1.90" O.D.	2.375" O.D.	2.875" O.D.
H-SECTION	2.25" x 1.70"	2.25" x 1.70"	2.25" x 1.70"
C-SECTION (ROLL-FORMED)	1.875" x 1.625"	2.25" x 1.70"	———
TOP, BOTTOM & BRACE RAILS			
TUBULAR - ROUND	1.66" O.D.		
TUBULAR - SQUARE	1.50" SQ.		
H-SECTION	1.625" x 1.50"		
C-SECTION (ROLL-FORMED)	1.625" x 1.25"		

NOTES:
SEE PAGE 3 FOR NOTES AND DETAILS

UNION PACIFIC RAILROAD ENGINEERING STANDARDS

HIGH SECURITY FENCING

UNION PACIFIC

ADOPTED: OCT. 14, 2020
REVISED: DEC. 7, 2020
FILE NO.: 0077

STD DWG
0077A
PAGE 2 OF 4

STD DWG
0077A
PAGE 2 OF 4

Copyright © 2020 by Union Pacific Railroad

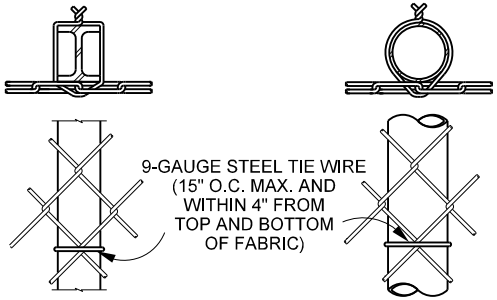

H-BEAM ROUND POST

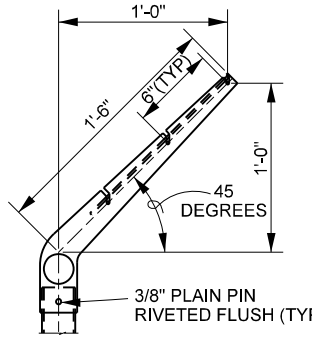

LINE POST

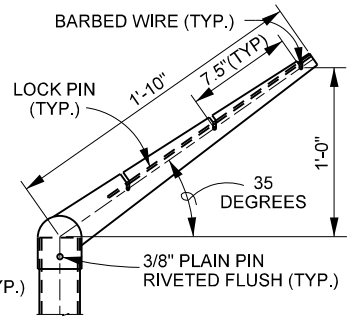

CORNER POST

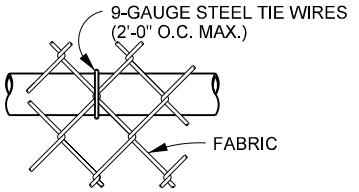

TOP OR BRACE RAIL ATTACHMENT

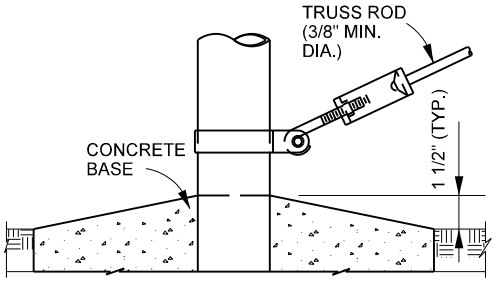

TRUSS ROD AND BAND

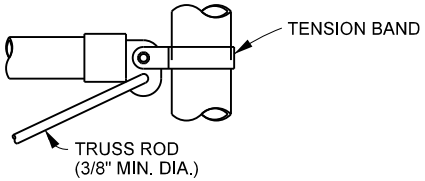

ROUND POST

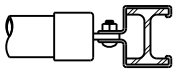

H-BEAM

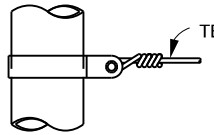

TENSION BAND DETAIL

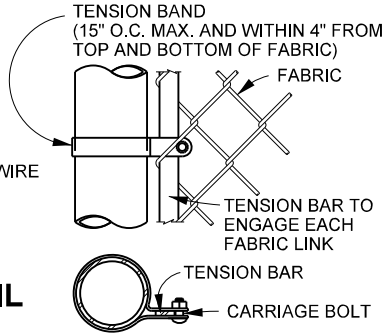

END OR GATE POST DETAIL

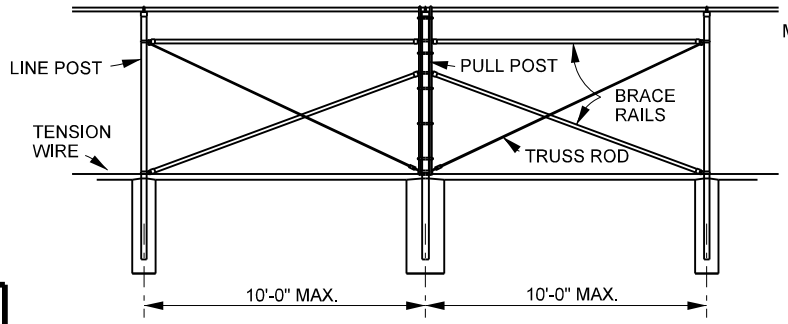

BRACE PANEL DETAIL

NOTE:
PROVIDE BRACE PANEL WHENEVER
STRAIGHT RUNS EXCEED 500 FEET.

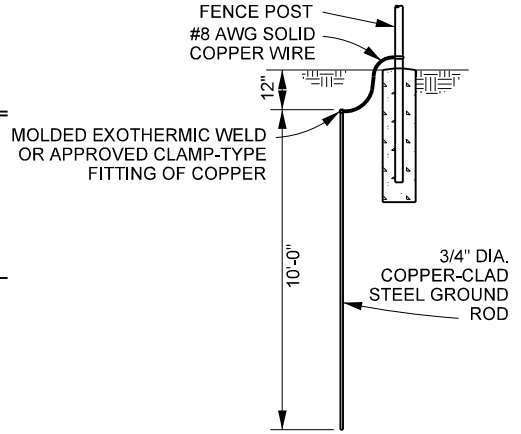

GROUNDING DETAIL

NOTES:

1. DETAILS SHOWN ARE TO CLARIFY REQUIREMENTS AND ARE NOT INTENDED TO LIMIT OTHER TYPES OF FENCE SECTIONS AND METHODS OF INSTALLATION THAT COMPLY WITH THE SPECIFICATIONS.
2. WIRE TIES, RAILS, POSTS, AND BRACES SHALL BE CONSTRUCTED ON THE SECURE SIDE OF THE FENCE ALIGNMENT. CHAIN-LINK FABRIC SHALL BE PLACED ON THE SIDE OPPOSITE THE SECURED AREA.
3. C-SECTION POSTS SHALL BE INSTALLED SO THAT THE VOID INSIDE THE POST IS COMPLETELY FILLED WITH CONCRETE UP TO THE TOP OF THE FOUNDATION.
4. GROUND METAL FENCE WITHIN 150' OF BOTH SIDES OF ANY OVERHEAD ELECTRICAL LINE CROSSING.
5. GROUND METAL FENCE AT 500' INTERVALS ALONG PARALLEL LENGTHS OF ANY ELECTRICAL OVERHEAD LINE.
6. LOCATE FENCE NEAR/AT RIGHT-OF-WAY TO ACCOUNT FOR OVERHAND OF BARBED WIRE IF USED, 1' INSIDE.

UNION PACIFIC RAILROAD ENGINEERING STANDARDS

HIGH SECURITY FENCING

UNION PACIFIC

ADOPTED: OCT. 14, 2020
REVISED: DEC. 7, 2020
FILE NO.: 0077

STD DWG
0077A
PAGE 3 OF 4

STD DWG
0077A
PAGE 3 OF 4

Copyright © 2020 by Union Pacific Railroad

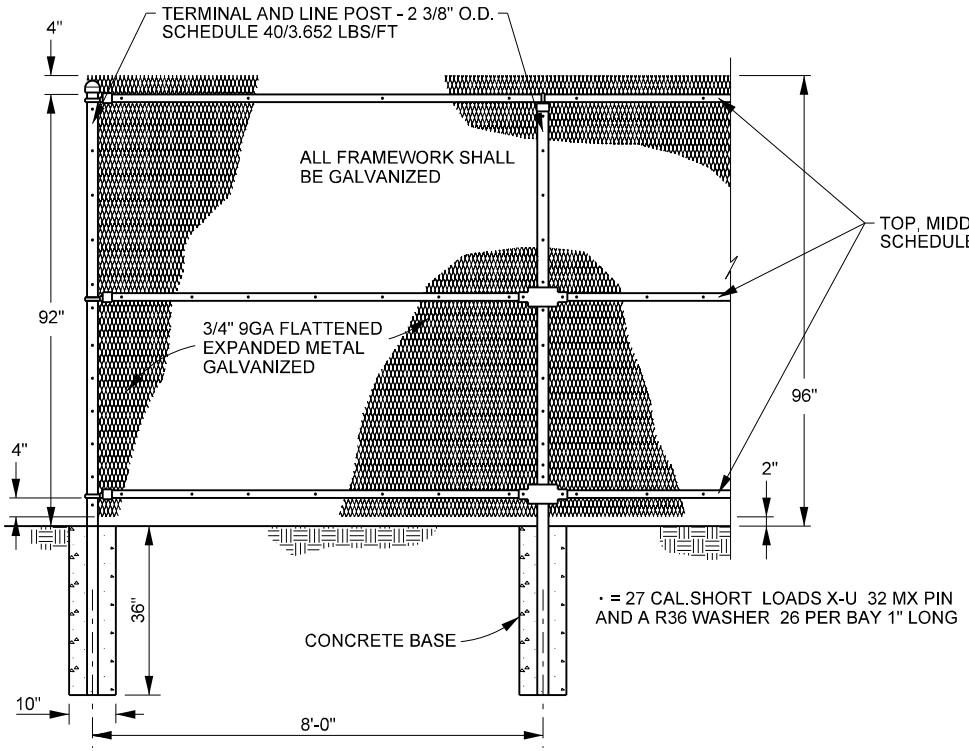

FE9-8 - EXPANDED METAL PUBLIC SAFETY FENCE 96" HIGH

NOTES:

1. THE SYSTEM SHALL INCLUDE ALL REQUIRED COMPONENTS. ALL MATERIAL SHALL BE NEW.
2. PANELS SHALL BE ATTACHED TO POSTS USING TEMPER-PROOF ANTI-THEFT "SECURITY" FASTENERS AND SPOT WELDED AS NECESSARY.
3. NEW FENCE POSTS WILL BE SET IN CONCRETE IN ACCORDANCE WITH INDUSTRY STANDARDS AS TO DEPTH AND DIAMETER. ALL POSTS SHALL BE SET IN COMMERCIAL QUALITY CONCRETE FOOTINGS. THE TOP OF THE FOOTINGS SHALL BE LEVEL WITH THE GROUND, CROWNED TO PROVIDE DRAINAGE AWAY FROM THE POSTS AND TOWELED SMOOTH. THE FOOTINGS SHALL BE ALLOWED TO CURE BEFORE ANY STRESS IS APPLIED.
4. THE FENCE SYSTEM SHALL BE INSTALLED IN ACCORDANCE WITH MANUFACTURER'S INSTALLATION INSTRUCTIONS.
5. END PANEL, CORNER PANEL AND GATE DETAILS TO COME FROM MANUFACTURER.

UNION PACIFIC RAILROAD ENGINEERING STANDARDS

HIGH SECURITY FENCING

ADOPTED: OCT. 14, 2020
REVISED: DEC. 7, 2020
FILE NO.: 0077

STD DWG 0077A PAGE 4 OF 4

STD DWG 0077A PAGE 4 OF 4

Copyright © 2020 by Union Pacific Railroad

STANDARD TURNOUT APPLICATIONS

WHERE A(N)...	DIVERGES FROM A... BRANCH TRACK,* YARD AND INDUSTRY LEAD OR TRACK (< 20 MPH)	HEAVY USAGE BRANCH TRACK, YARD LEAD OR INDUSTRIAL LEAD (> 20 MPH)	WOOD TIE SIDING	TIMBER MAINLINE (LESS THAN 40MGT)	TIMBER MAINLINE (GREATER THAN 40MGT)	CONCRETE TIE SIDING	CONCRETE MAINLINE
INDUSTRY TRACK OR SET OUT TRACK	#9 W/ SMSG	#9 W/ RBM (NO HST)	#11 W/ JUMP FROG	#11 W/ JUMP FROG	#11 W/ JUMP FROG	#11 CONC W/ JUMP FROG***	#11 CONC W/ JUMP FROG***
INDUSTRY TRACK UTILIZED BY SHUTTLE OR UNIT TRAINS	#11 W/ SPRG (NO HST)	#11 W/ SPRG (NO HST)	#11 W/ SPRG (NO HST)	#11 W/ SPRG (NO HST)	#15 W/ SPRG (WITH HST)	#11 CONC W/ SPRG	#15 CONC W/ SPRG
BRANCH TRACK OR INDUSTRY LEAD WHERE TRACK SPEED ON DIVERGING ROUTE IS 20 MPH OR LESS.	#11 W/ SMSG	#11 W/ RBM (NO HST)	#11 W/ SPRG (NO HST)	#11 W/ SPRG (NO HST)	#11 W/ SPRG (WITH HST)	#11 CONC W/ SPRG ***	#11 CONC W/ SPRG
BRANCH TRACK OR INDUSTRY LEAD WHERE TRACK SPEED ON DIVERGING ROUTE IS GREATER THAN 20 MPH.	#15 W/ SPRG (NO HST)	#15 W/ SPRG (NO HST)	#11 W/ SPRG (NO HST)	#15 W/ SPRG (NO HST)	#15 W/ SPRG (WITH HST)	#15 CONC W/ SPRG	#15 CONC W/ SPRG
YARD TRACK	#9 W/ SMSG	#9 W/ RBM (NO HST)	N/A	N/A	N/A	N/A	N/A
YARD LEAD OR SWITCHING LEAD	#11 W/ SMSG	#11 W/ RBM (NO HST)	#11 W/ SPRG (NO HST)	#11 W/ RBM (NO HST)	#11 W/ SPRG TIER 2	#11 CONC W/ SPRG	#11 CONC W/ SPRG
SIDING	N/A	N/A	N/A	#15 W/ SPRG (NO HST)	#15 W/ SPRG (WITH HST)	N/A	#15 CONC W/ SPRG

BETWEEN MAIN TRACKS

WHERE A(N)...	TIMBER MAINLINE (LESS THAN 40MGT)	TIMBER MAINLINE (GREATER THAN 40MGT)	CONCRETE MAINLINE
MAIN TRACK (HAND THROW CROSSOVER)	#11 W/ SPRG (NO HST)	#11 W/ SPRG (WITH HST)	#11 CONC W/ SPRG
SINGLE MAIN TO MULTIPLE MAIN WHERE DIVERGENT SPEED OF 40 MPH OR LESS IS REQUIRED	#20 W/ SPRG (NO HST)	#20 W/ RBM (WITH HST) OR #20 W/ SPRG (WITH HST)	#24 CONC W/ MPF
SINGLE MAIN TO MULTIPLE MAIN WHERE DIVERGENT SPEED OF 50 MPH IS REQUIRED	#24 W/ SPRG (NO HST)	#24 W/ SPRG (WITH HST)	#24 CONC W/ MPF
MULTIPLE MAIN TRACK (DUAL CONTROL CROSSOVER) WHERE DIVERGENT SPEED OF 40 MPH OR LESS IS REQUIRED	#20 W/ SPRG (NO HST)	#24 W/ SPRG (WITH HST)	#24 CONC W/ MPF
MULTIPLE MAIN TRACK (DUAL CONTROL CROSSOVER) WHERE DIVERGENT SPEED OF 50 MPH IS REQUIRED	#24 W/ SPRG (NO HST)	#24 W/ SPRG (WITH HST)	#24 CONC W/ MPF
JUNCTIONS WHERE TWO OR MORE MAIN TRACKS CONVERGE AND WHERE DIVERGENT SPEED OF 40MPH IS REQUIRED	#20 W/ SPRG (NO HST)	#20 W/ RBM (WITH HST)	#24 CONC W/ MPF
JUNCTIONS WHERE TWO OR MORE MAIN TRACKS CONVERGE AND WHERE DIVERGENT SPEED OF 50MPH IS REQUIRED	#24 W/ SPRG (NO HST)	#24 W/ SPRG (WITH HST)	#24 CONC W/ MPF

ABBREVIATIONS: CONC=CONCRETE, MPF=MOVABLE POINT FROG, RBM=RAIL BOUND MANGANESE FROG, SMSG=SOLID MANGANESE SELF GUARDED FROG, SPRG=SPRING, W/=WITH, HST=HOLLOW STEEL TIE

* BRANCH TRACK IS A TRACK WITH LESS THAN 10 MGT AND 20 MPH OR LESS.
** MPF TO BE USED WHEN 7 OR MORE DIVERGING MOVES PER DAY ARE MADE.
*** JUMP FROG TURNOUTS SHOULD BE UTILIZED WHERE MAINLINE TRACK OR SIDING TRACK CONNECTS TO A SPUR OR SET OUT TRACK. FOR DETAILS ON JUMP FROG UTILIZATION, REFERENCE STANDARD DRAWINGS 3250-3272.

RECOMMENDED SWITCH STAND APPLICATIONS FOR HAND THROW SWITCHES

SWITCH STAND MODEL	MAST HEIGHT	OPERATING CONTROL	TRAILABLE	IN-TRACK APPLICATION
36-EH	HIGH	RAISED TRI-HANDLE	NO	MAIN AND SIDINGS
1008ARS	HIGH	RAISED STRAIGHT HANDLE	NO	MAIN AND SIDINGS
112-E	HIGH	COLUMN HANDLE	NO	MAIN AND SIDINGS
1004ARS	LOW	RAISED STRAIGHT HANDLE	NO	MAIN AND SIDINGS
1003ARS	LOW	RAISED STRAIGHT HANDLE	YES	OTHER THAN MAIN AND SIDINGS
22-E	LOW	RAISED TRI-HANDLE	YES	OTHER THAN MAIN AND SIDINGS
HYDRA SWITCH 3000	LOW	PUSH BUTTON	YES	OTHER THAN MAIN AND SIDINGS

NOTES:
1. THIS TABLE IS TO BE USED AS RECOMMENDED DESIGN GUIDELINES.
2. AT EACH CONTROL POINT WHERE THERE IS MORE THAN ONE FROG, MPF'S ARE NOT TO BE MIXED WITH RBM'S OR SPRING FROG'S.
3. WOOD AND CONCRETE TURNOUTS WILL BE FURNISHED IN 136# RAIL.
4. MINIMUM TRACK CENTERS OF 20' ARE RECOMMENDED FOR ALL DUAL CONTROL MAINLINE CROSSOVERS.
5. SPRING FROGS ARE RECOMMENDED WHEN DIVERGING TRAFFIC IS LESS THAN 30%, OTHERWISE RBM IS PREFERRED.
6. LOCAL CONDITIONS MAY REQUIRE THE USE OF TURNOUTS NOT CONSISTENT WITH THIS MATRIX. EXCEPTIONS MUST BE APPROVED BY THE CHIEF ENGINEER-MAINTENANCE FOR THE AFFECTED TERRITORY.
7. WHEN CROSSOVERS ARE REQUIRED BETWEEN DIFFERING TRACK TYPES, THE HIGHER CLASS TRACK WILL GOVERN THE TURNOUT NUMBER TO BE USED FOR BOTH TURNOUTS.
8. THE TYPE OF TURNOUT (IE: WOOD, CONCRETE) SHOULD BE DETERMINED BY THE RESPECTIVE TRACK TYPE. ALSO NOTE THAT MGT PERTAINS TO TRACK TONNAGE - NOT CORRIDOR TONNAGE.
9. WHEN THE APPLICATION REQUIRES A #11 TURNOUT TO BE POWERED, AND GEOMETRY AND CLEARANCE ALLOWS, UPGRADE TO A #15 POWER TURNOUT.

UNION PACIFIC RAILROAD ENGINEERING STANDARDS

STANDARD TURNOUT APPLICATIONS

ADOPTED: SEP. 21, 2020
REVISED: MAY 18, 2021
FILE NO.: 0080

STD DWG 0080C

STD DWG 0080C

Copyright © 2021 by Union Pacific Railroad